power supply	:	3x380V/50Hz
control voltage	:	220V
signal voltage	:	220V / 24V
standard	:	CENELEC HD 384 / EN 50156-1 (VDE 0100) (VDE 0116)
system of protection	:	IP54

desmet ballestra

GekaKonus®

Internet: www.gekakonus.net
E-mail: info@gekakonus.net
Phone +49 (0) 721 / 94374-0
Fax +49 (0) 721 / 9437444

wiring diagram

customer	:	desmet ballestra
part of plant	:	NUK-HP-3500
drawing no.	:	10-9842
cabinet	:	1000x1400x400mm WHD

designed with ELCAD-AUCOTEC (R) 7.11.0
SES-Schaltanlagen GmbH
Etogesstrasse 42
D-76275 Ettlingen

SES-Schaltanlagen GmbH
Kruppstrasse 8A
D-76344 Eggenstein

Tel.: +49 (0) 721 / 9419424 / 25
Fax: +49 (0) 721 9419426
www.ses-schaltanlagen.de
info@ses-schaltanlagen.de

				date	13.04.2018	desmet ballestra	GekaKonus®	wiring diagram SES-18-3876 NUK-HP 3500 95bar cover 1				
				proc.	E.H.							
				rev.								
alteration	date	name	norm			substitute through	substitute for	origin		10-9842	sheet 0	53 Bl.

Erläuterungen zur Funktion
Commentary for the function

Jedes Blatt ist in einzelne Abschnitte unterteilt
Each sheet is subdiviced in sections

Alle Geräte erhalten als Bezeichnung die Nummer des jeweiligen Abschnittes
The symbol for all units is the number of the section belonging to it.

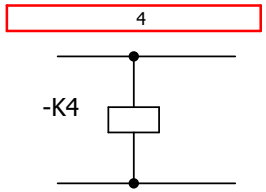

Verbindungen (Abbruchstellen) zu anderen Blättern oder Abschnitten des Schaltplanes werden mit den Nummern der Abschnitte und des Blattes gekennzeichnet !
Connections with continuation on other sheets or sections are marked with numbers of the resp. sections !

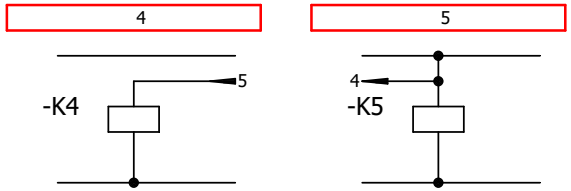

Klemmen ausserhalb des Schaltschrankes
terminals outside of the switchboard

-XB
o ==> Brennerklemmen,burnerterminals

Der Schaltplan besteht aus Einzelblättern welche durch Blatt-Nr. und Blatt-Anzahl gekennzeichnet sind

The wiring diagram is composed of seperate sheets,marked with sheet-number and total number of the sheets.

WARNING

Installation, operation and maintenance procedures performed by unqualified personnel may results in improper adjustment and unsafe operation. Either condition may result in equipment damage or personnel injury. Only qualified and specific trained personnel is allowed to carry out the installation, commissioning, operation and maintain the series boiler/heater and the boiler/heater equipment. The boiler/heater and boiler/heater equipment is tested of logic function prior the boiler/heater leave the Gekakonus manufacturing shop. All actions on the boiler/heater and boiler/heater equipment done by the own and/or foreign staff is on the risk and responsibility of the buyer and/or operator of the boiler/heater.

Scope of Manual

The boiler/heater instruction manual provides installation, adjustment, maintenance instructions and controller configuration data. Complete instructions of the series boiler/heater and boiler/heater equipment found in the instruction manuals.

WELD CAUTION

Switch off the main switch on the switchbord and interrupt the protection earth (PE) cable before begin of any welding on the boiler/heater piping system.
Do not connect the ground connection of the welding set on any part of the boiler/heater during the welding on the boiler/heater piping system. The electrical boiler/heater system is endangered and can be destroyed.
Connect the protection earth (PE) cable again when the welding procedure is concluded.

GekaKonus®
D - 76344 Eggenstein-Leop.

designed with ELCAD/AUCOPLAN (R) 7.11.0

			date	13.04.2018			wiring diagram SES-18-3876	
			proc.	E.H.		GekaKonus®	NUK-HP	
			rev.				3500	
alteration	date	name	norm		substitute through	substitute for	origin	95bar	10-9842	sheet 0A
								cover 2		53 Bl.

boiler	type	sheet	name of sheet	date	special memo
NUK-HP	3500	0	cover 1	19.02.2018	
NUK-HP	3500	0A	cover 2	19.02.2018	
NUK-HP	3500	0B	table of contents	19.02.2018	
NUK-HP	3500	0C	table of contents	19.02.2018	
NUK-HP	3500	A1	part list	19.02.2018	
NUK-HP	3500	A2	part list	19.02.2018	
NUK-HP	3500	A3	part list	19.02.2018	
NUK-HP	3500	B	arrangement drawing mounting plate	19.02.2018	
NUK-HP	3500	C	arrangement drawing panel door	19.02.2018	
NUK-HP	3500	1	feeding	19.02.2018	
NUK-HP	3500	2	emergency stop	19.02.2018	
NUK-HP	3500	3	primary circuit	19.02.2018	
NUK-HP	3500	4	primary circuit	19.02.2018	
NUK-HP	3500	5	pump control	19.02.2018	
NUK-HP	3500	6	burner motor control	19.02.2018	
NUK-HP	3500	7	cooling air fan, preheater control	19.02.2018	
NUK-HP	3500	8	SPS-LOGO control	19.02.2018	
NUK-HP	3500	9	safety circuit	19.02.2018	
NUK-HP	3500	10	safety circuit	19.02.2018	
NUK-HP	3500	11	safety circuit	19.02.2018	
NUK-HP	3500	12	safety circuit	19.02.2018	
NUK-HP	3500	13	safety circuit	19.02.2018	
NUK-HP	3500	14	safety circuit	19.02.2018	
NUK-HP	3500	15	safety circuit	19.02.2018	
NUK-HP	3500	16	digital inputs LOGO-SPS	19.02.2018	
NUK-HP	3500	17	digital outputs LOGO-SPS	19.02.2018	
NUK-HP	3500	18	switch board fan	19.02.2018	
NUK-HP	3500	19	burner control	19.02.2018	
NUK-HP	3500	20	burner control	19.02.2018	
NUK-HP	3500	21	burner control	19.02.2018	
NUK-HP	3500	22	burner control	19.02.2018	
NUK-HP	3500	23	burner control	19.02.2018	
NUK-HP	3500	24	burner control	19.02.2018	
NUK-HP	3500	25	burner control	19.02.2018	
NUK-HP	3500	26	burner control	19.02.2018	
NUK-HP	3500	27	burner control	19.02.2018	
NUK-HP	3500	28	burner control	19.02.2018	
NUK-HP	3500	29	burner control	19.02.2018	
NUK-HP	3500	30	burner control	19.02.2018	
NUK-HP	3500	31	burner control	19.02.2018	
NUK-HP	3500	32	burner control	19.02.2018	
NUK-HP	3500	33	burner control	19.02.2018	
NUK-HP	3500	34	burner control	19.02.2018	
NUK-HP	3500	35	burner control	19.02.2018	
NUK-HP	3500	36	messages	19.02.2018	
NUK-HP	3500	37	pot. free cont.	19.02.2018	
NUK-HP	3500	38	control voltage 24VDC	19.02.2018	
NUK-HP	3500	39	spare	19.02.2018	
NUK-HP	3500	40	connection diagram -XP,-X1,-X2,-X3	19.02.2018	

			date	13.04.2018	
			proc.	E.H.	
			rev.		
alteration	date	Name	Norm		substitute through / substitute for / origin

GekaKonus®

wiring diagram SES-18-3876
NUK-HP
3500
95bar
table of contents

10-9842

sheet 0B
53 Bl.

boiler	type	sheet	name of sheet	date	special memo
NUK-HP	3500	41	connection diagram -X4,-X6,-XL,-XN	19.02.2018	
NUK-HP	3500	42	connection diagram -XS4,-XS5,-XS6,-XS7,-XS8,-XS9	19.02.2018	
NUK-HP	3500	43	connection diagram -XS4,-XS5,-XS6	19.02.2018	
NUK-HP	3500	44	connection diagram -XS7,-XS8,-XS9,-XS10	19.02.2018	

			date	13.04.2018			
			proc.	E.H.			
			rev.				
alteration	date	Name	Norm		substitute through	substitute for	origin

GekaKonus®

wiring diagram SES-18-3876
NUK-HP
3500
95bar
table of contents

10-9842

sheet 0C
53 Bl.

part list

equipment identifier	item no.	class	manufacturer	Typ	comment	refer to
-A82	299310	A	SI	6ED1052-1FB00-0BA8	SIEMENS-LOGO	/8.B2
-A84	299313	A	SI	6ED1055-1FB00-0BA1	SIEMENS-LOGO Erw.8DI/8DA	/8.B4
-A85	299312	A	SI	6ED1055-1MA00-0BA0	SIEMENS-LOGO Erw.	/8.B5
-A87	299314	A	SI	6ED1055-4MH00-0BA0	LOGO-08-Text Display	/8.B7
-A191	0330000500	A	WE	W-FM 100	combustion manager	/19.A1
-A213	0330000502	A	WE	ABE	comb.manager indication-/operation unit	/21.D3
-F13	0040003200	F	FI	7P.23.8.275.1020	surge protection device	/1.D3
-F14	0040000451	F	KM	FAZ-S2/1	capacity breaker control voltage	/1.E3
-F14.1	0040000451	F	KM	FAZ-S2/1	capacity breaker control voltage	/1.E4
-F15	0040000454	F	KM	FAZ-S6/1	capacity breaker control voltage	/1.E4
-F15.1	0040000453	F	KM	FAZ-S4/1	capacity breaker control voltage	/1.E5
-F16	0040000454	F	KM	FAZ-S6/1	capacity breaker control voltage	/1.C6
-F17	0040000451	F	KM	FAZ-S2/1	capacity breaker control voltage	/1.C7
-F17.1	0040000451	F	KM	FAZ-S2/1	capacity breaker control voltage	/1.C7
-F100	123207	F	GE	NRS 1-50	water level limiter	/11.B2
-F182	400004	F	RIT	SK 3110.00	temperature controller switch board fan	/18.A2
-G385	299000	G	IS	SNT-A36	power supply	/38.A4
-H27	0040001330	H	KM	M22-L-G	signal lamp	/2.D7
-H56	0040001310	H	KM	M22-L-R	signal lamp	/5.D6
-H74	0040001310	H	KM	M22-L-R	signal lamp	/7.D4
-H76	0040001330	H	KM	M22-L-G	signal lamp	/7.D6
-H177	0230000102	H	WER	118 068 28,230V	hooter	/17.D7
-H247	0040001310	H	KM	M22-L-R	signal lamp	/24.E7
-H248	0040001310	H	KM	M22-L-R	signal lamp	/24.E8
-H254	0040001330	H	KM	M22-L-G	signal lamp	/25.D4
-H291	0040001330	H	KM	M22-L-G	signal lamp	/29.D1
-H293	0040001330	H	KM	M22-L-G	signal lamp	/29.D3
-H367	0040001330	H	KM	M22-L-G	signal lamp	/36.D7
-H368	0040001320	H	KM	M22-L-Y	signal lamp	/36.D8
-K23	0030000133	K	ZA	SR3D AC/DC24V	emergency-stop relay	/2.C2
-K24	0041000016	K	KM	DILA-22,24VDC	auxilary relay	/2.E4
-K25	0030000020	K	ABB	NF31E-11,24VDC	auxilary relay	/2.E5
-K26	0040003051	K	FI	55.32 8 230 00 40	auxilary relay	/2.D6
-K53	0041000030	K	KM	DILM9-10	main contactor	/5.E3

comments :

designed with AUCOTEC-ELCAD (R) 7.11.0

part list

equipment identifier	item no.	class	manufacturer	Typ	comment	refer to	
-K62	0041000034	K	KM	DILM17-10	main contactor	/6.E2	
-K63	0040000047	K	KM	ETR4-51-A	timing relay	/6.E3	
-K64	0041000032	K	KM	DILM12-10	main contactor	/6.E4	
-K65	0041000032	K	KM	DILM12-10	main contactor	/6.E5	
-K72	0041000030	K	KM	DILM9-10	main contactor	/7.E2	
-K73	0040003056	K	FI	55.34 8 230 50 40	auxilary relay	/7.E3	
-K75	0041000034	K	KM	DILM17-10	main contactor	/7.E5	
-K77	0041000034	K	KM	DILM17-10	main contactor	/7.E7	
-K97	0041000003	K	KM	DILA-22	auxilary relay	/9.E7	
-K98	0030000022	K	ABB	NF22E-13	auxilary relay	/9.E8	
-K103	0041000003	K	KM	DILA-22	auxilary relay	/10.D3	
-K104	0030000022	K	ABB	NF22E-13	auxilary relay	/10.D4	
-K127	0041000003	K	KM	DILA-22	auxilary relay	/12.E7	
-K128	0030000022	K	ABB	NF22E-13	auxilary relay	/12.E8	
-K135	0040003054	K	FI	55.32 9 024 00 40	auxilary relay	/13.E5	
-K147	0041000002	K	KM	DILA-31	auxilary relay	/14.E7	
-K148	0030000022	K	ABB	NF22E-13	auxilary relay	/14.E8	
-K152	0030000002	K	ABB	N 31E	auxilary relay	/15.D2	
-K154	0040003051	K	FI	55.32 8 230 00 40	auxilary relay	/15.D4	
-K176	0040003051	K	FI	55.32 8 230 00 40	auxilary relay	/17.D6	
-K195	0030000021	K	ABB	NF31E-13	auxilary relay	/19.E5	
-K197	0040003056	K	FI	55.34 8 230 50 40	auxilary relay	/19.E7	
-K246	0040003051	K	FI	55.32 8 230 00 40	auxilary relay	/24.E5	
-K251	0040003051	K	FI	55.32 8 230 00 40	auxilary relay	/25.D1	
-K252	0050000300	K	SI	3RT2023-1AP	main contactor	/25.D2	
-K252	0050001004	K	SI	3RT2926-2PA01	timing unit cut in delayed	/25.D2	
-K254	0041000030	K	KM	DILM9-10	main contactor	/25.D4	
-K292	0040003056	K	FI	55.34 8 230 50 40	auxilary relay	/29.E2	
-K293	0040003056	K	FI	55.34 8 230 50 40	auxilary relay	/29.E3	
-K324	0040003051	K	FI	55.32 8 230 00 40	auxilary relay	/32.E4	
-K352	0040003051	K	FI	55.32 8 230 00 40	auxilary relay	/35.D2	
-K354	0040003051	K	FI	55.32 8 230 00 40	auxilary relay	/35.D4	
-K356	0040003051	K	FI	55.32 8 230 00 40	auxilary relay	/35.D6	
-K362	0030000022	K	ABB	NF22E-13	auxilary relay	/36.D2	

comments :

designed with AUCOTEC-ELCAD (R) 7.11.0

part list

equipment identifier	item no.	class	manufacturer	Typ	comment	refer to
-K364	0040003051	K	FI	55.32 8 230 00 40	auxilary relay	/36.D4
-M182	400070	M	RIT	SK 3323.107/207	switch board fan und Filter	/18.D2
-N120	2304110006	N	JU	DICON IMAGO	pressure / temperature controller	/32.A2
-N258	230903	N	JU	JUMO DR100	temperature controller	/25.B5
-N276	230903	N	JU	JUMO DR100	temperature controller	/24.B3
-N294	230903	N	JU	JUMO DR100	temperature controller	/26.B1
-Q11	0070000010	Q	SO	NLT180/3E/Z33	main switch	/1.B1
-Q15	0040000094	Q	KM	PKZM0-6,3 T	motor protection switch	/1.A5
-Q32	0040000095	Q	KM	PKZM0-6,3	motor protection switch	/3.A2
-Q35	0040000093	Q	KM	PKZM0-4	motor protection switch	/3.A5
-Q37	0040000096	Q	KM	PKZM0-1,6	motor protection switch	/3.A7
-Q42	0040000171	Q	KM	PKZM 0-32	motor protection switch	/4.A2
-Q45	0040000107	Q	KM	PKZM4 -40	motor protection switch	/4.A5
-S22	0040001110	S	KM	M22-PV	emergency stop	/2.B2
-S24	0040001171	S	KM	M22-DL-Y	push button	/2.B4
-S52	0040001150	S	KM	M22-DDL-GR-GB1/GB0	double push button	/5.B2
-S72	0040001614	S	KM	M22-WRLK-G	control switch	/7.B2
-S152	0040001180	S	KM	M22-DL-B	push button	/15.A2
-S167	0040001100	S	KM	M22-D-S	push button	/16.B8
-S194	0070000055	S	SO	WS1/8ZM/70S	control switch	/19.C5
-S195	0040001170	S	KM	M22-DL-R	push button	/19.C6
-S205	0070000050	S	SO	A1/8ZM/70S	control switch	/20.B5
-S207	0070000058	S	SO	ST41/8ZM/70S	control switch	/20.B7
-S352	0040001614	S	KM	M22-WRLK-G	control switch	/35.A2
-S354	0040001614	S	KM	M22-WRLK-G	control switch	/35.A4
-S356	0040001614	S	KM	M22-WRLK-G	control switch	/35.A6
-T2	0330000341	T	WE	Trafo W-FM	transformer W-FM	/22.C3
-T15	0130000027	T	IS	IST473/29,800VA	transformer	/1.B5

comments :

designed with AUCOTEC-ELCAD (R) 7.11.0

			date	13.04.2018				wiring diagram SES-18-3876	
			proc.	E.H.				NUK-HP	
			rev.					3500	
alteration	date	name	norm		substitute through	substitute for	origin	95bar	10-9842
								part list	

GekaKonus®

sheet A3
53 Bl.

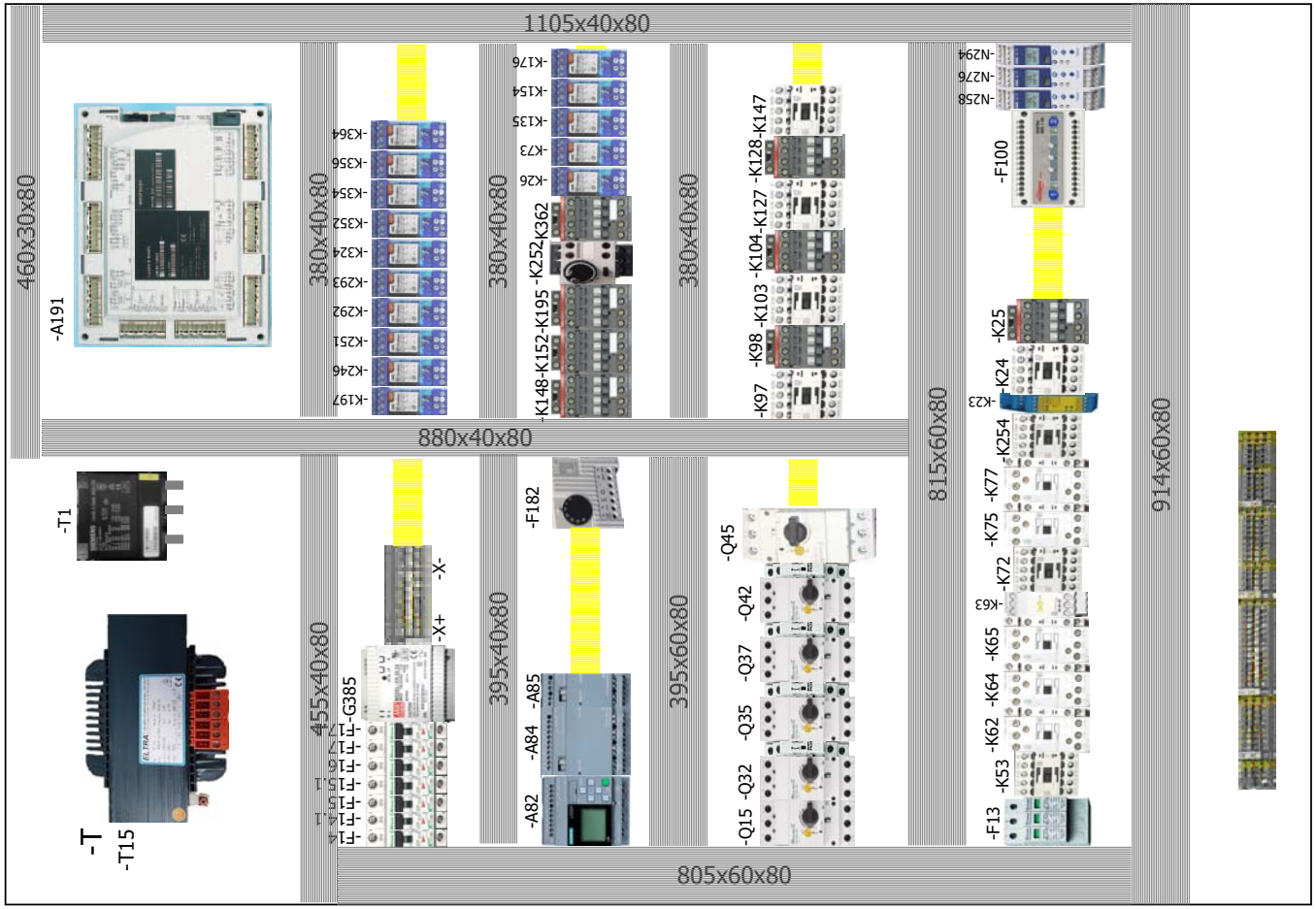

scale : 1:5

measure unit : mm

				date	13.04.2018				wiring diagram SES-18-3876			
				proc.	E.H.			GekaKonus®	NUK-HP			
				rev.					3500			
									95bar			
alteration	date	name	norm		substitut through	substitut for	origin		arrangement drawing mounting plate		10-9842	sheet B 53 Bl.

designed with AUCOTEC-ELCAD (R) 7.11.0

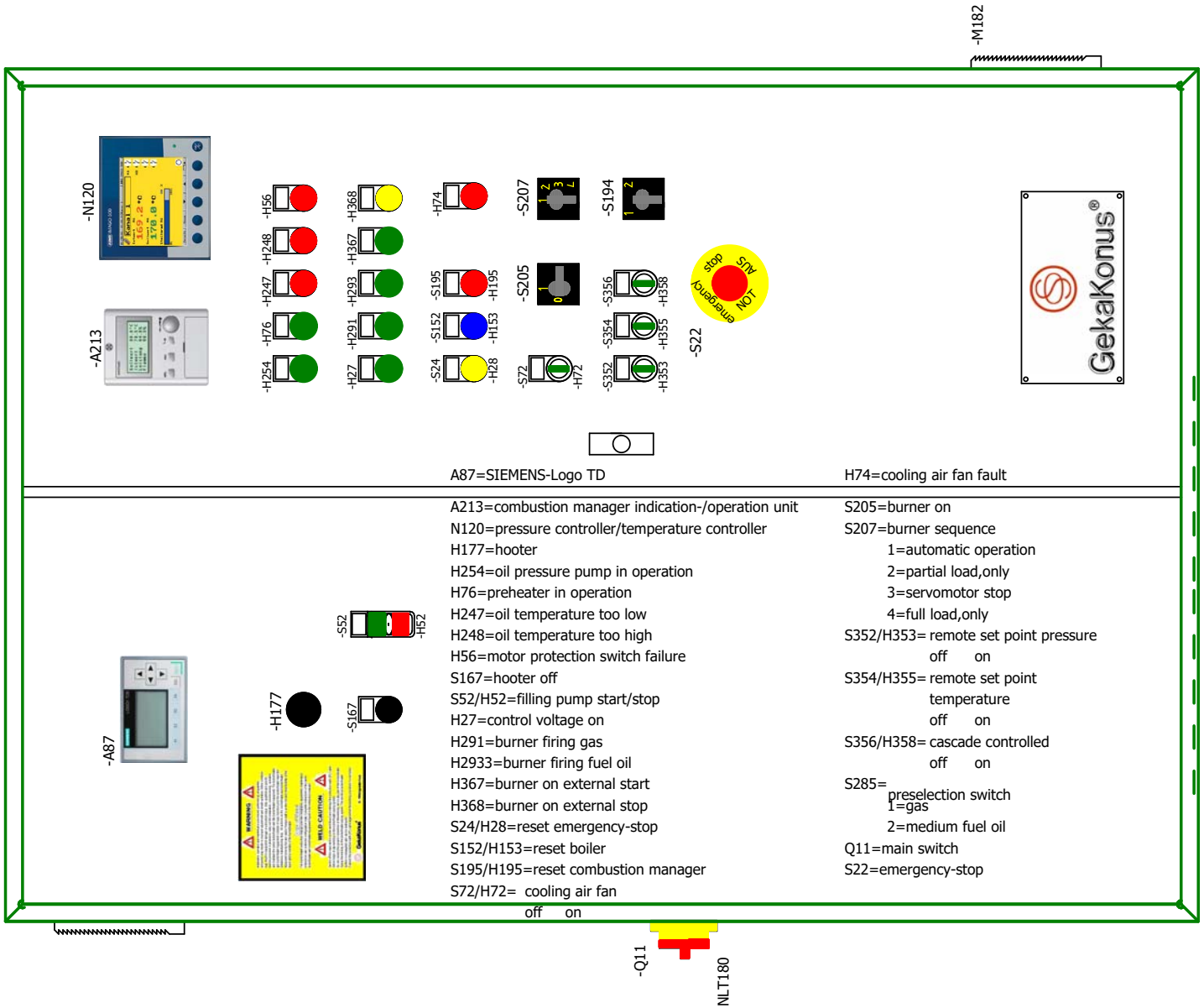

A87=SIEMENS-Logo TD

H74=cooling air fan fault

A213=combustion manager indication-/operation unit
N120=pressure controller/temperature controller
H177=hooter
H254=oil pressure pump in operation
H76=preheater in operation
H247=oil temperature too low
H248=oil temperature too high
H56=motor protection switch failure
S167=hooter off
S52/H52=filling pump start/stop
H27=control voltage on
H291=burner firing gas
H2933=burner firing fuel oil
H367=burner on external start
H368=burner on external stop
S24/H28=reset emergency-stop
S152/H153=reset boiler
S195/H195=reset combustion manager
S72/H72= cooling air fan
off on

S205=burner on
S207=burner sequence
1=automatic operation
2=partial load,only
3=servomotor stop
4=full load,only
S352/H353= remote set point pressure
off on
S354/H355= remote set point temperature
off on
S356/H358= cascade controlled
off on
S285= preselection switch
1=gas
2=medium fuel oil
Q11=main switch
S22=emergency-stop

scale : 1:5
measure unit : mm

designed with AUCOTEC-ELCAD (R) 7.11.0

				date	13.04.2018				wiring diagram SES-18-3876		
				proc.	E.H.			GekaKonus®	NUK-HP		
				rev.					3500		
alteration	date	name	norm		substitut through	substitut for	origin		95bar	10-9842	sheet C
									arrangement drawing panel door		53 Bl.

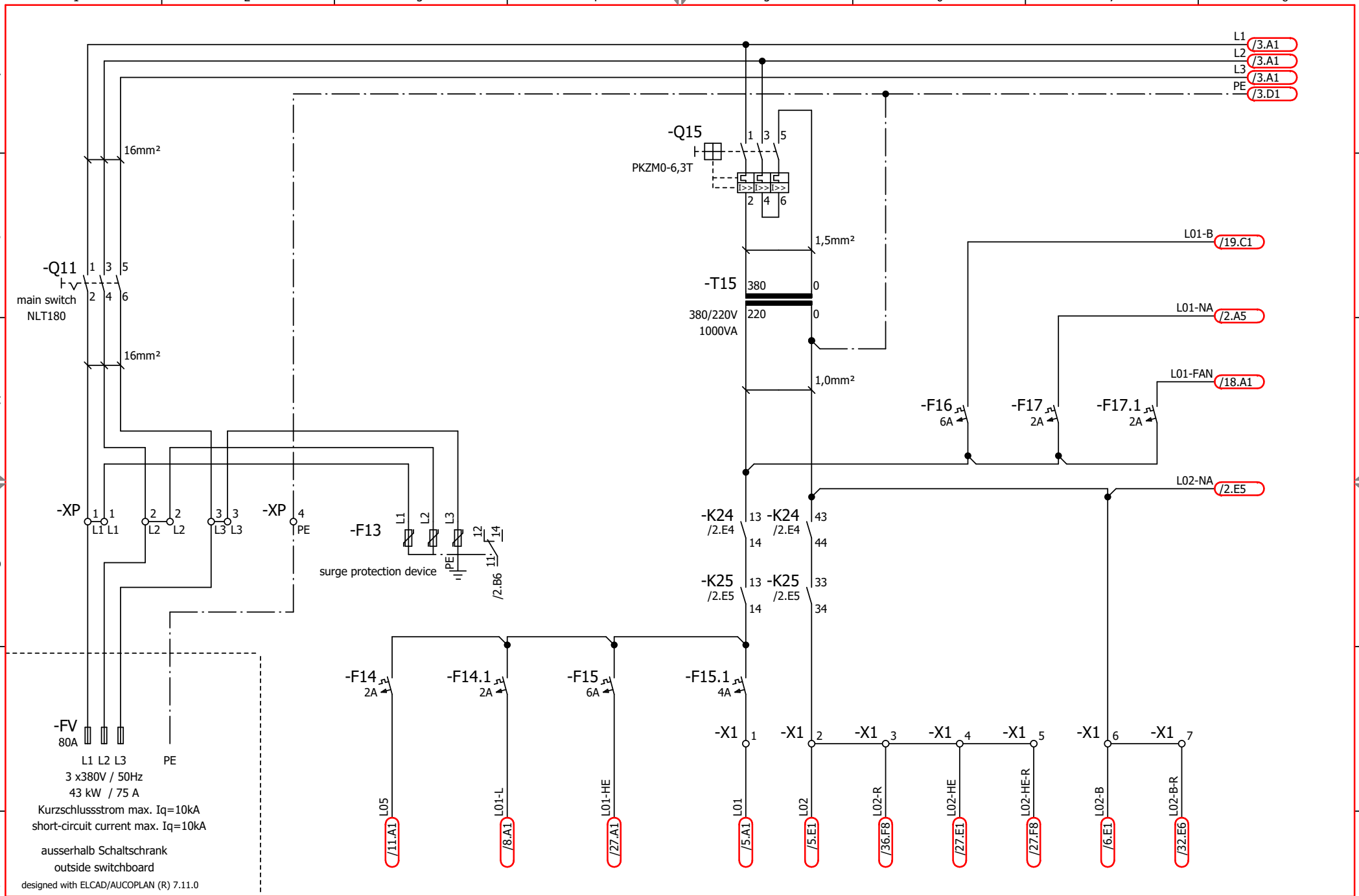

			date	13.04.2018				wiring diagram SES-18-3876 NUK-HP 3500 95bar feeding			
			proc.	E.H.							
			rev.								
alteration	date	name	norm		substitute through	substitute for	origin		10-9842	sheet 1	53 Bl.

GekaKonus®

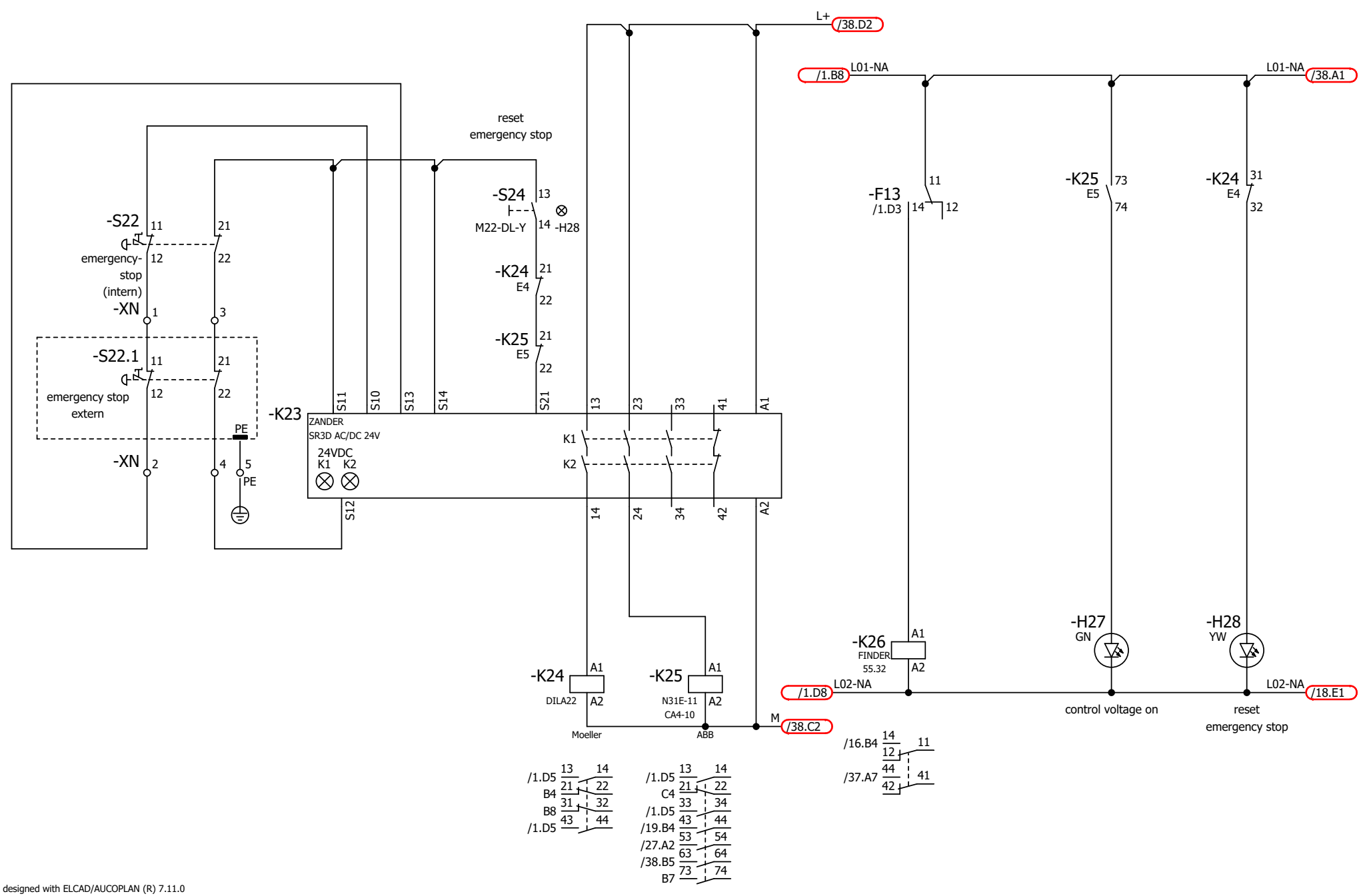

designed with ELCAD/AUCOPLAN (R) 7.11.0

			date	13.04.2018			wiring diagram SES-18-3876	
			proc.	E.H.		GekaKonus®	NUK-HP	
			rev.				3500	
alteration	date	name	norm		substitute through	substitute for	95bar	10-9842
						origin	emergency stop	

sheet 2
53 Bl.

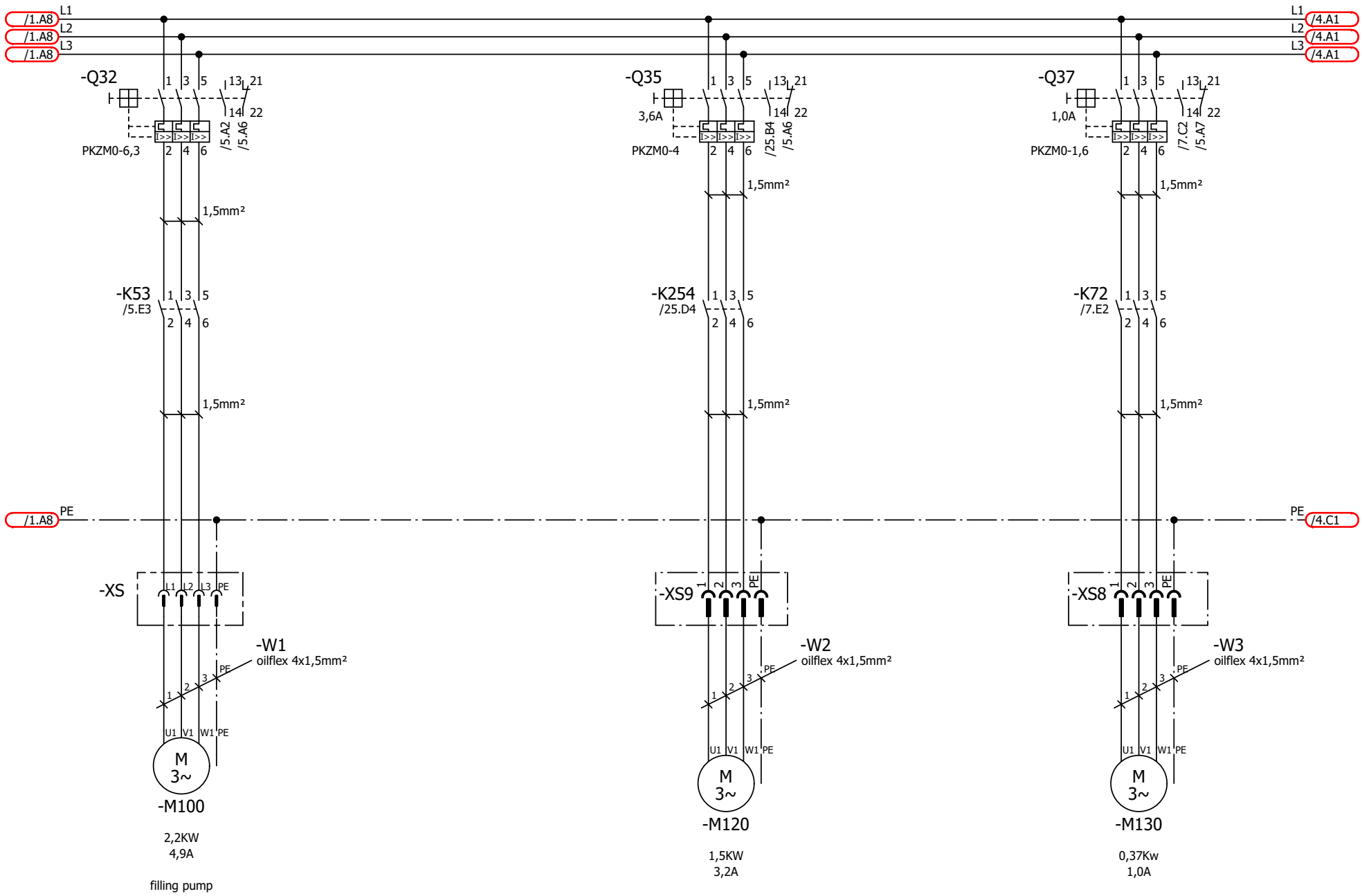

designed with ELCAD/AUCOPLAN (R) 7.11.0

			date	13.04.2018			wiring diagram SES-18-3876 NUK-HP 3500 95bar primary circuit	
			proc.	E.H.		GekaKonus®		
			rev.					
alteration	date	name	norm		substitute through	substitute for	origin	10-9842	sheet 3 / 53 Bl.

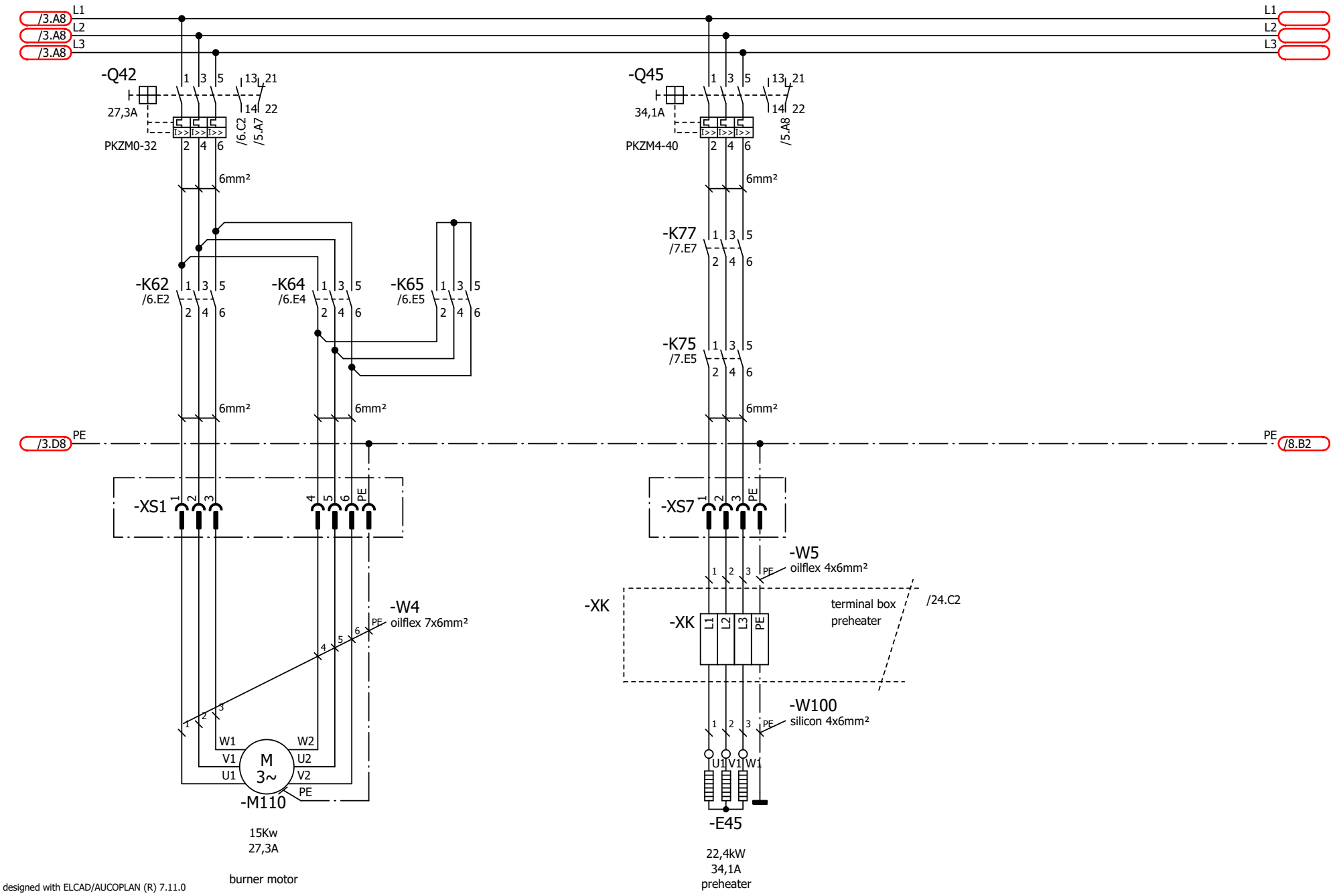

designed with ELCAD/AUCOPLAN (R) 7.11.0

			date	13.04.2018			
			proc.	E.H.			
			rev.				
alteration	date	name	norm		substitute through	substitute for	origin

GekaKonus®

wiring diagram SES-18-3876
NUK-HP
3500
95bar
primary circuit

10-9842

sheet 4
53 Bl.

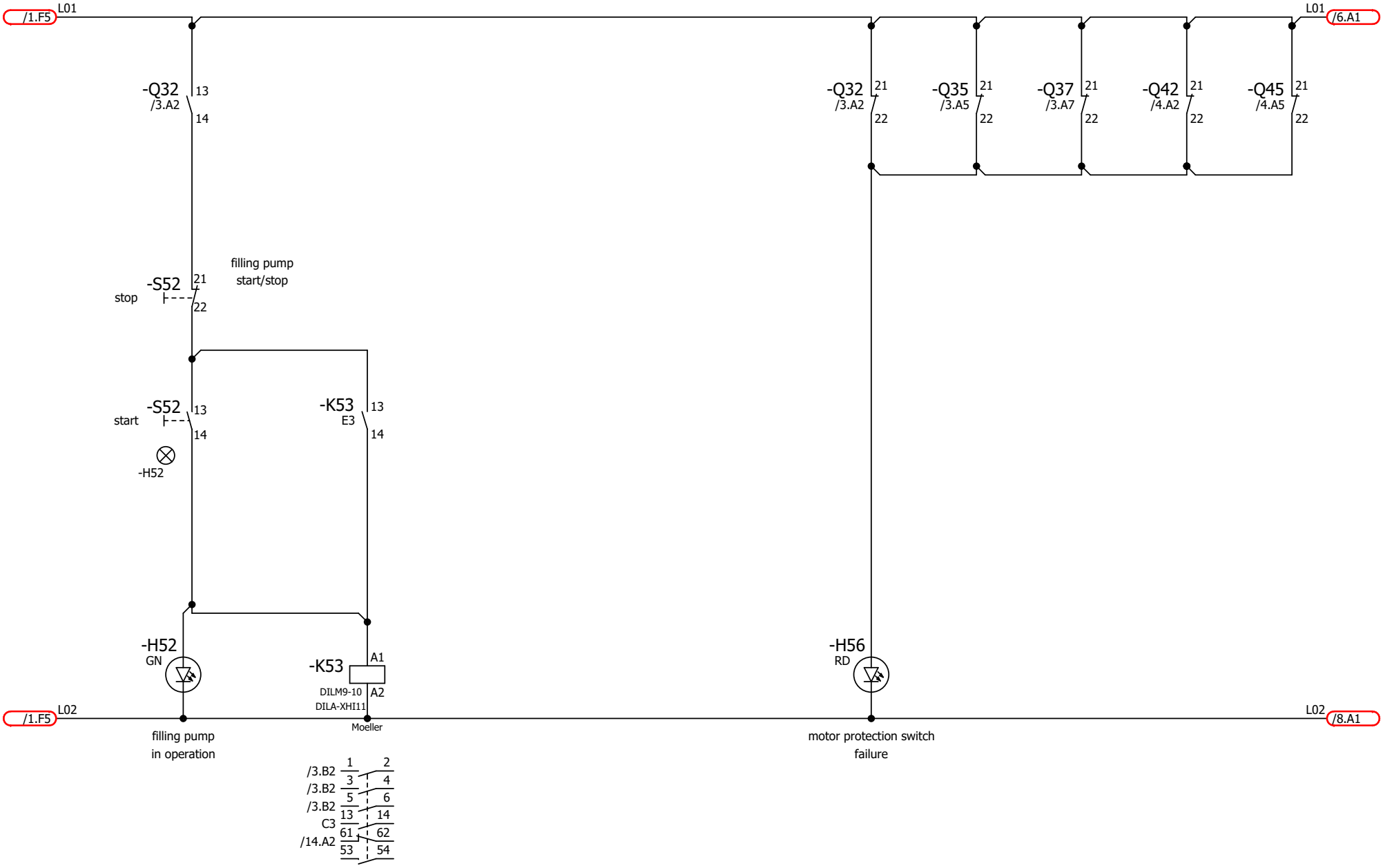

designed with ELCAD/AUCOPLAN (R) 7.11.0

				date	13.04.2018				wiring diagram SES-18-3876			
				proc.	E.H.				NUK-HP			
				rev.					3500			
alteration	date	name	norm			substitute through	substitute for	origin	95bar	10-9842	sheet 5	
									pump control		53 Bl.	

GekaKonus®

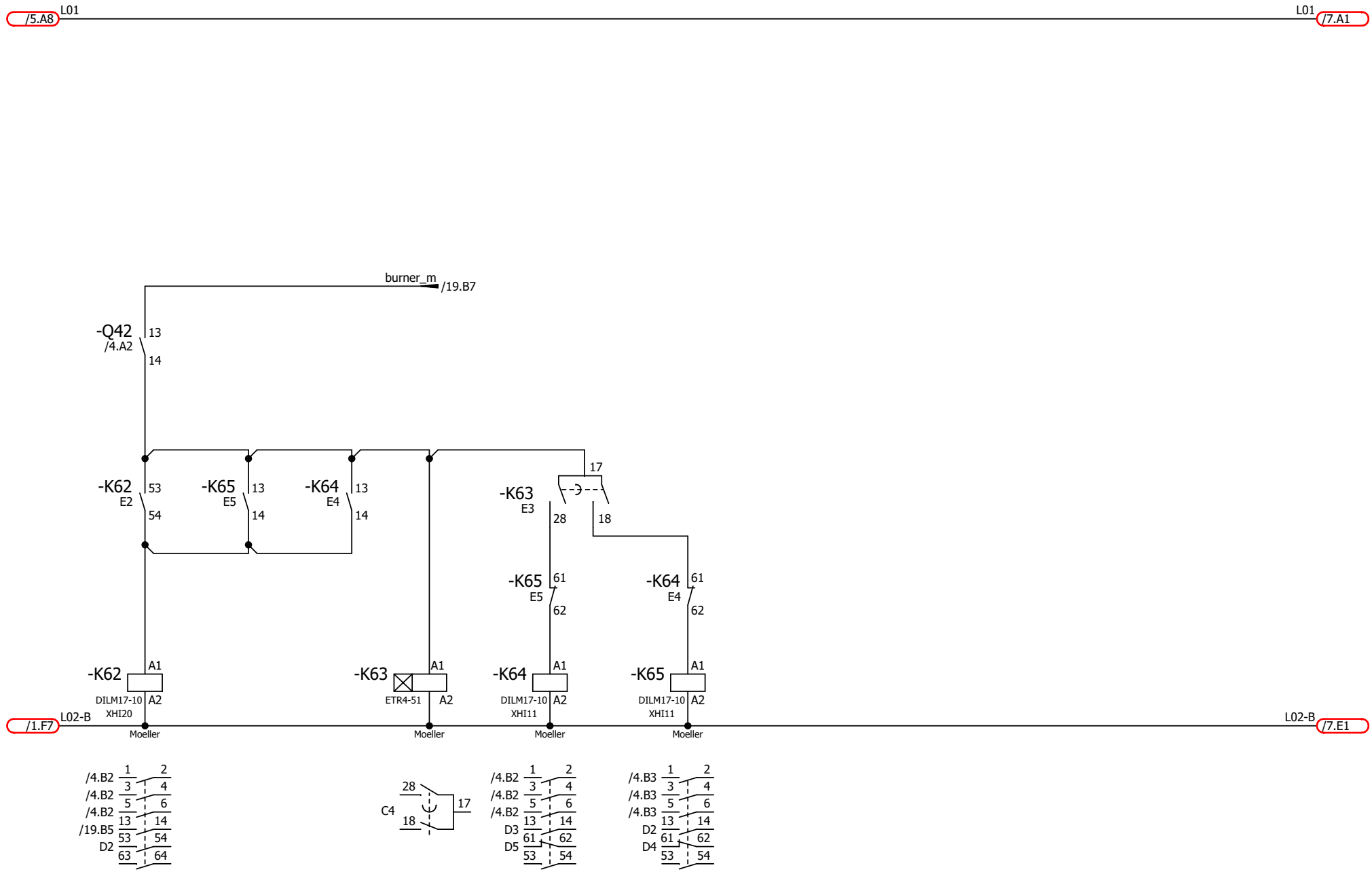

designed with ELCAD/AUCOPLAN (R) 7.11.0

			date	13.04.2018				wiring diagram SES-18-3876 NUK-HP 3500 95bar burner motor control	
			proc.	E.H.					
			rev.						
alteration	date	name	norm		substitute through	substitute for	origin		10-9842	sheet 6 / 53 Bl.

GekaKonus®

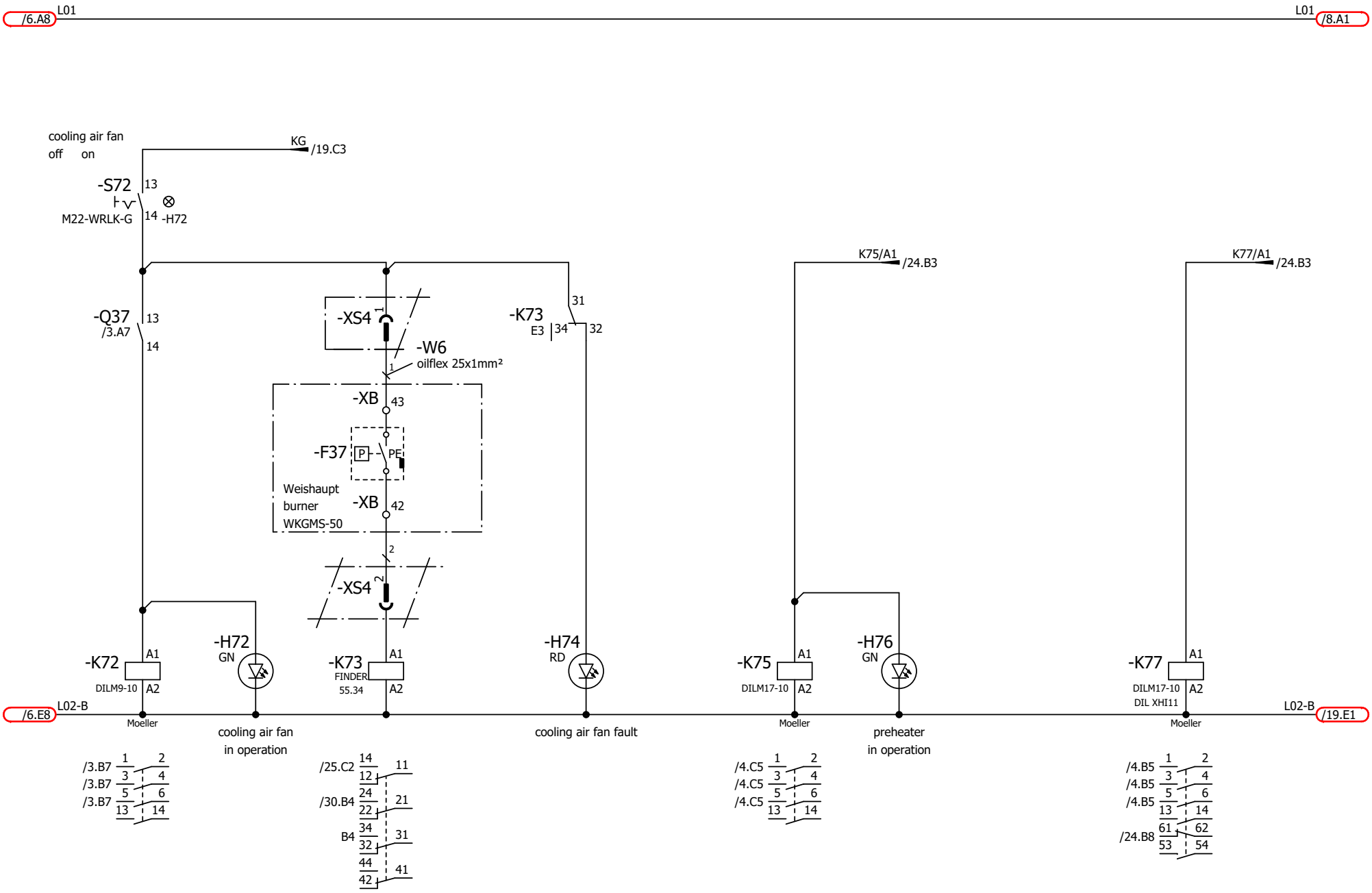

designed with ELCAD/AUCOPLAN (R) 7.11.0

				date	13.04.2018			wiring diagram SES-18-3876	
				proc.	E.H.			NUK-HP	
				rev.				3500	
alteration	date	name	norm		substitute through	substitute for	origin	95bar	
								cooling air fan, preheater control	

GekaKonus®

10-9842

sheet 7
53 Bl.

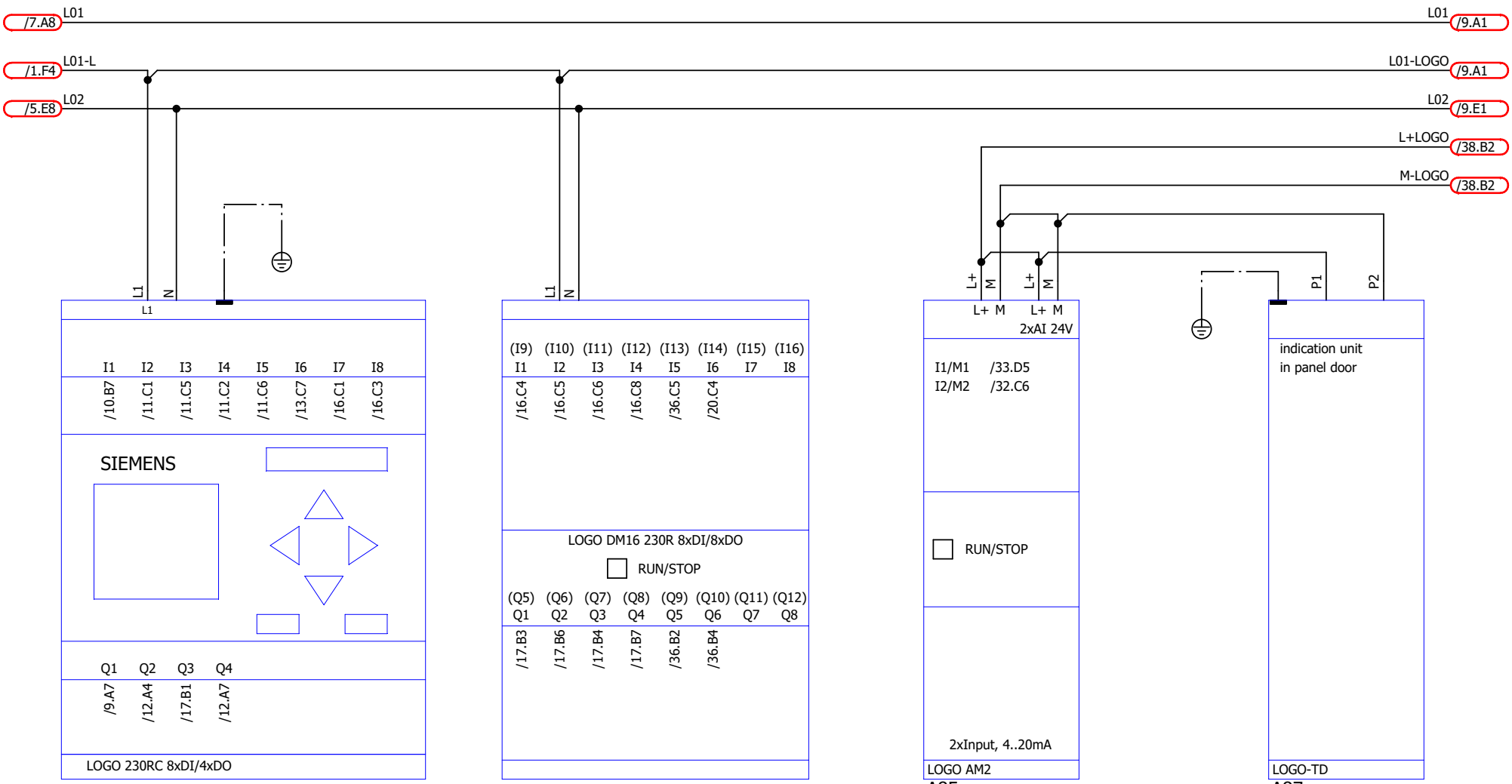

designed with ELCAD/AUCOPLAN (R) 7.11.0

			date	13.04.2018		GekaKonus®	wiring diagram SES-18-3876 NUK-HP 3500 95bar SPS-LOGO control	
			proc.	E.H.				
			rev.					
alteration	date	name	norm		substitute through	substitute for	origin	10-9842	sheet 8 / 53 Bl.

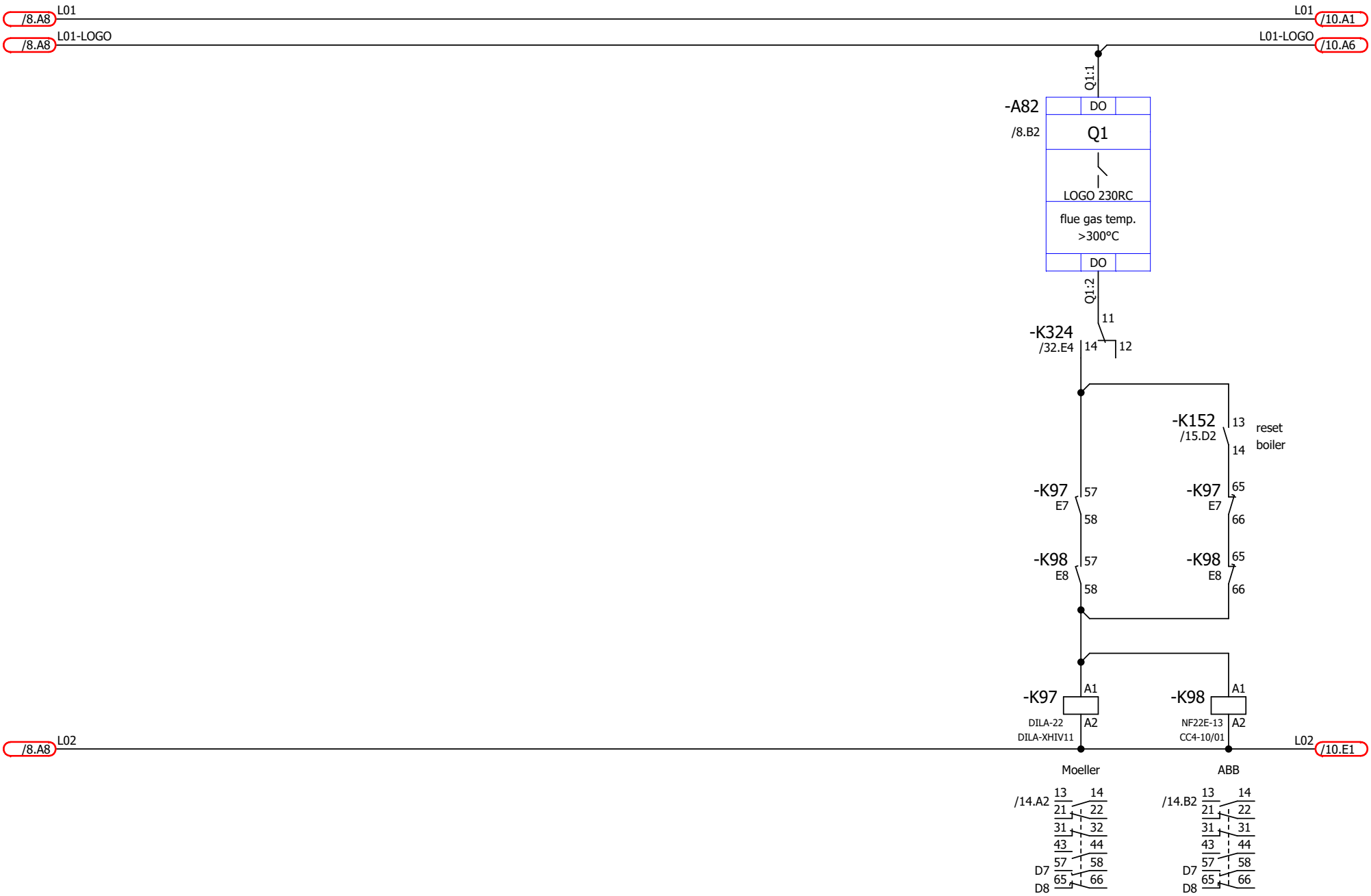

designed with ELCAD/AUCOPLAN (R) 7.11.0

			date	13.04.2018		GekaKonus®	wiring diagram SES-18-3876 NUK-HP 3500 95bar safety circuit	
			proc.	E.H.				
			rev.					
alteration	date	name	norm		substitute through	substitute for	origin	10-9842	sheet 9 / 53 Bl.

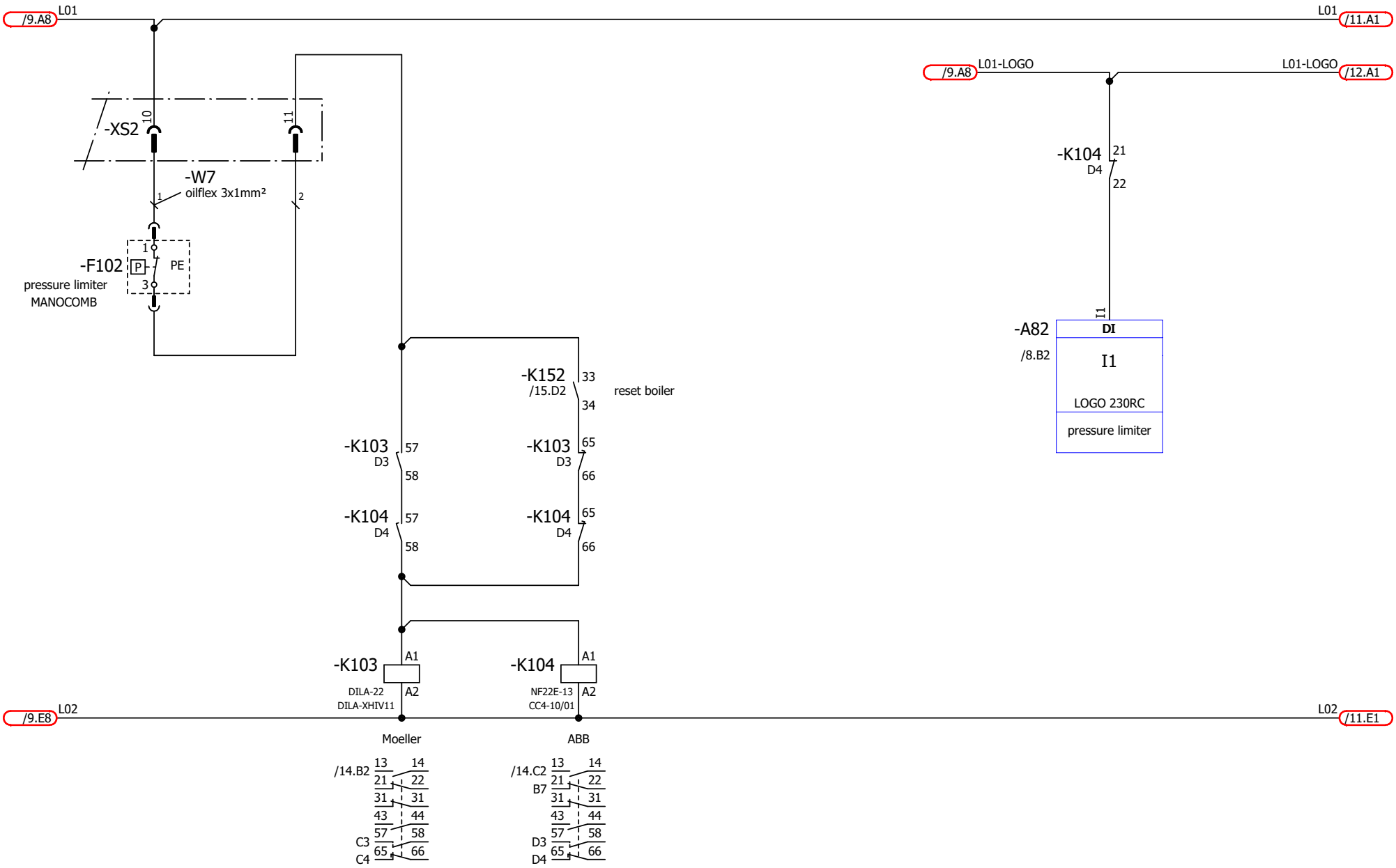

designed with ELCAD/AUCOPLAN (R) 7.11.0

				date	13.04.2018				wiring diagram SES-18-3876			
				proc.	E.H.				NUK-HP			
				rev.					3500			
alteration	date	name	norm			substitute through	substitute for	origin	95bar	10-9842	sheet 10	
									safety circuit		53 Bl.	

GekaKonus®

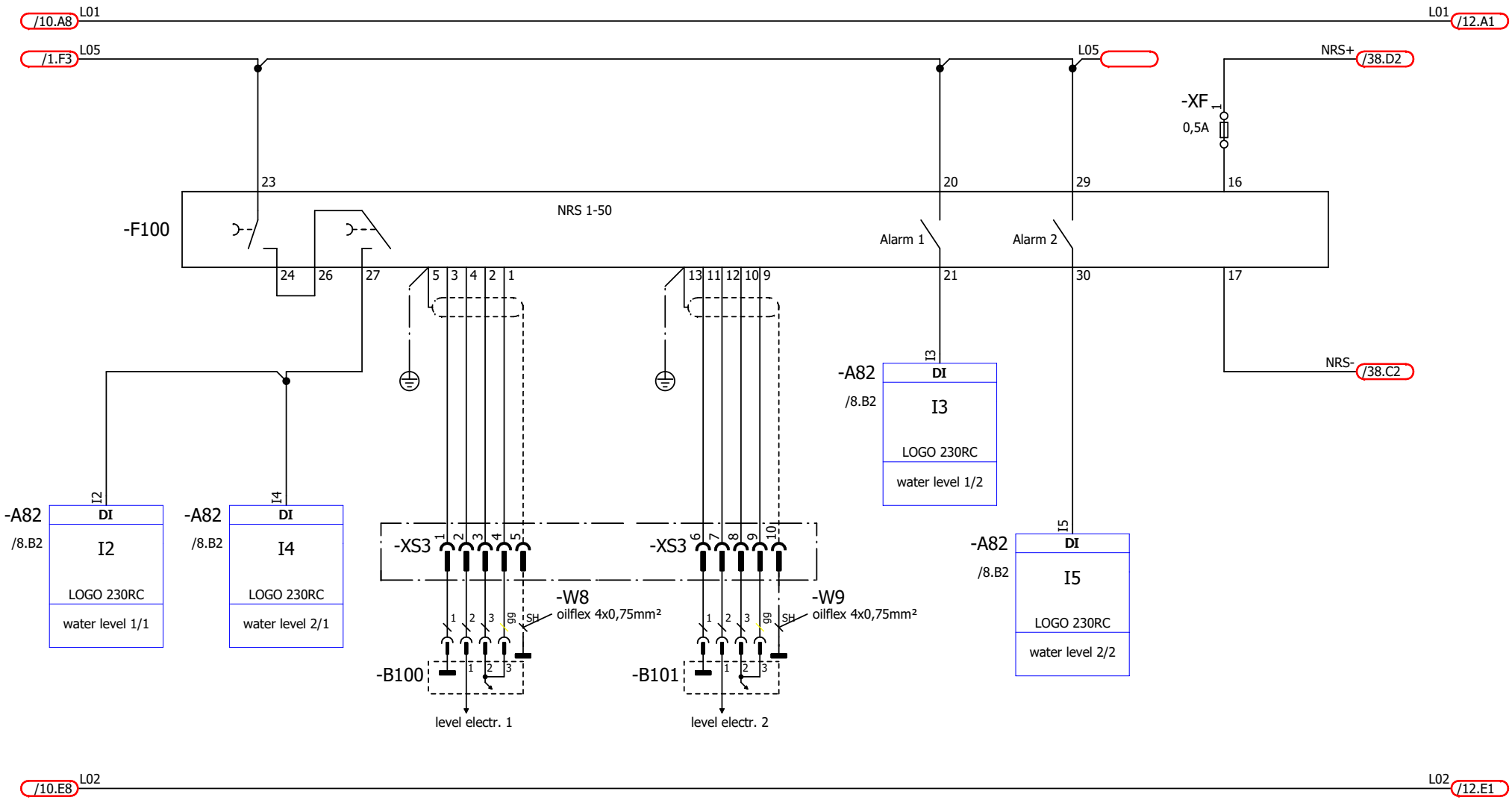

designed with ELCAD/AUCOPLAN (R) 7.11.0

			date	13.04.2018			wiring diagram SES-18-3876		
			proc.	E.H.		GekaKonus®	NUK-HP		
			rev.				3500		
alteration	date	name	norm		substitute through	substitute for	origin	95bar	10-9842	sheet 11
								safety circuit		53 Bl.

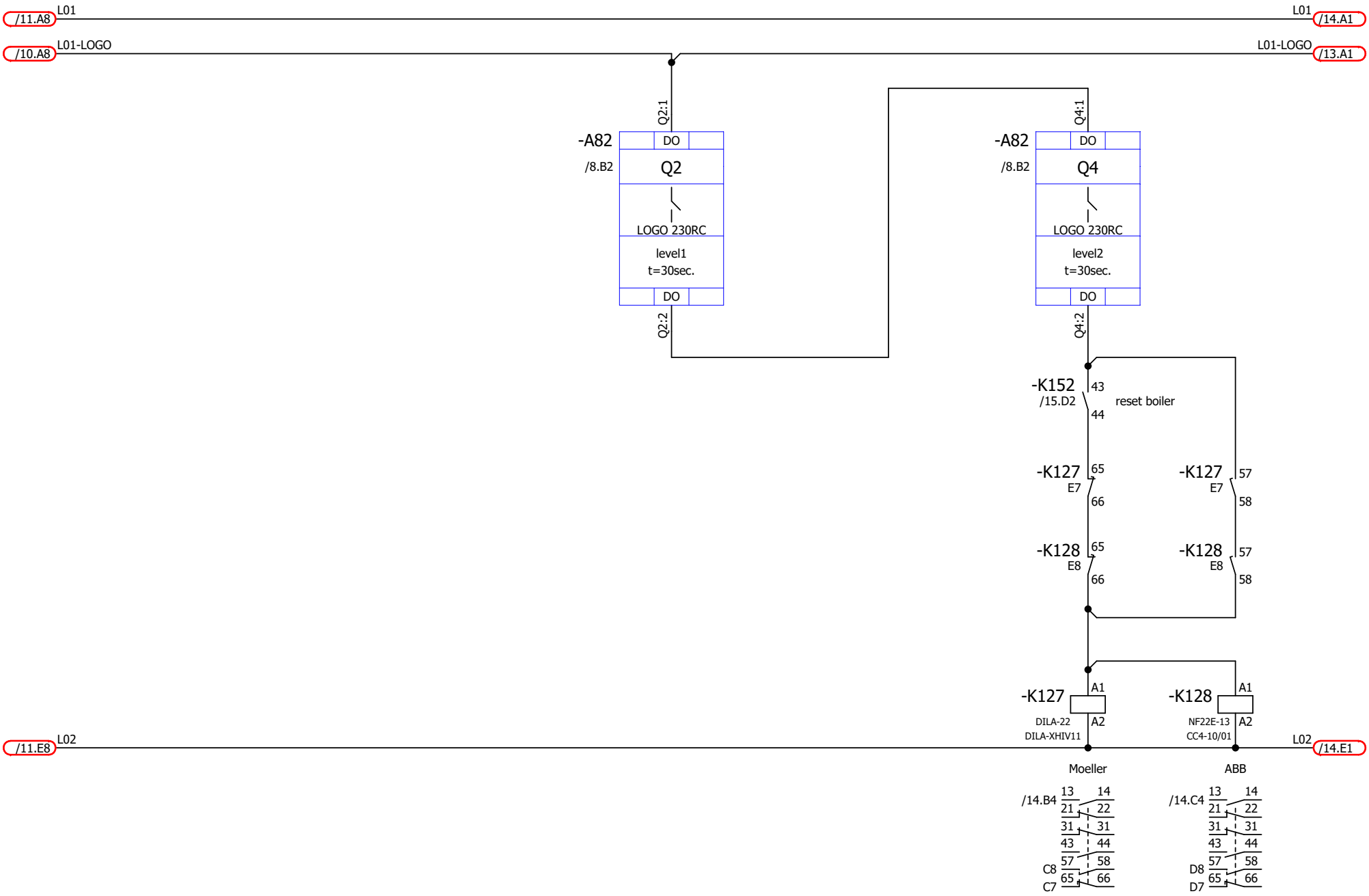

designed with ELCAD/AUCOPLAN (R) 7.11.0

			date	13.04.2018		GekaKonus®	wiring diagram SES-18-3876 NUK-HP 3500 95bar safety circuit		
			proc.	E.H.					
			rev.					10-9842	sheet 12
alteration	date	name	norm		substitute through	substitute for	origin		53 Bl.

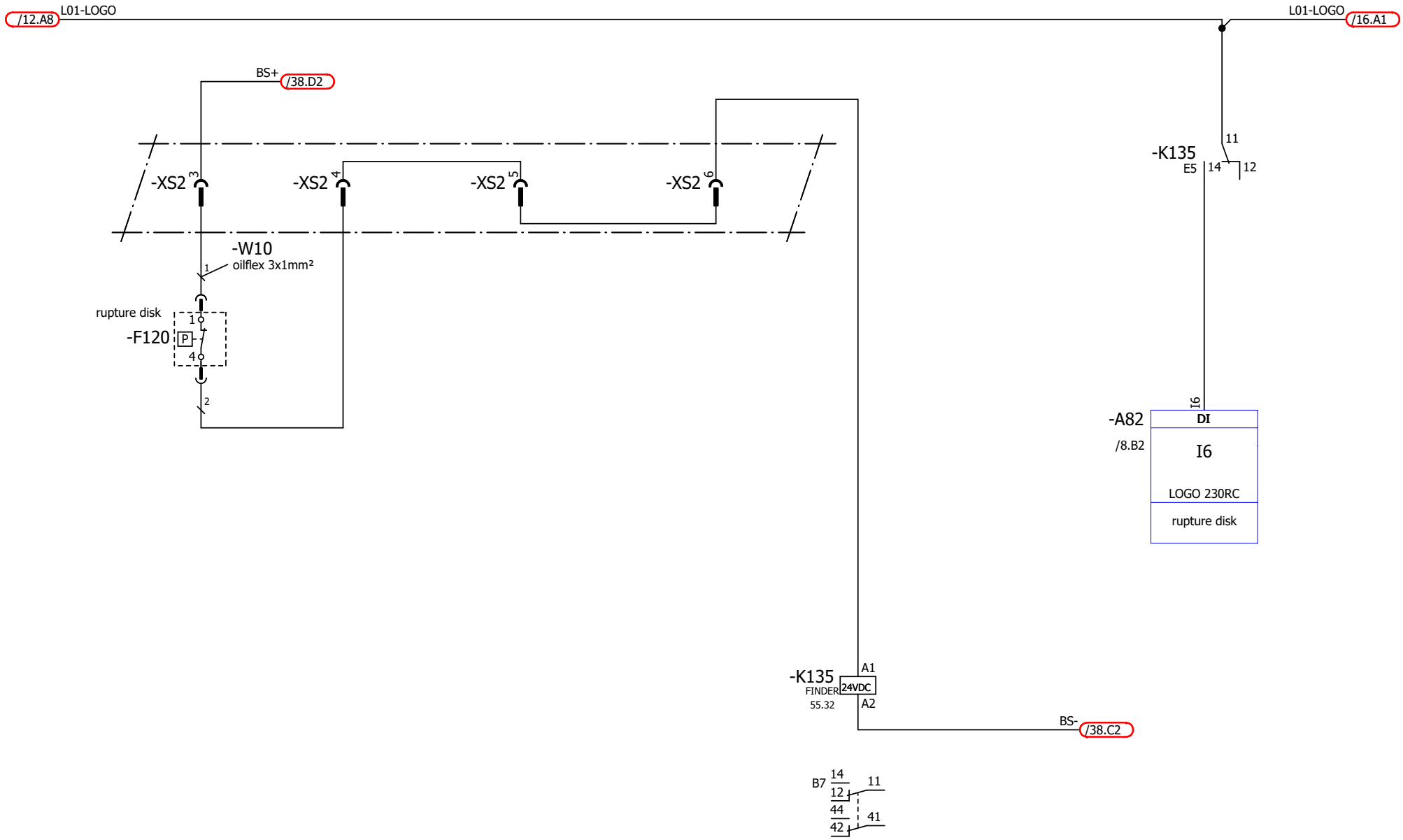

designed with ELCAD/AUCOPLAN (R) 7.11.0

				date	13.04.2018				wiring diagram SES-18-3876			
				proc.	E.H.				NUK-HP			
				rev.					3500			
alteration	date	name	norm			substitute through	substitute for	origin	95bar	10-9842	sheet 13	
									safety circuit		53 Bl.	

GekaKonus®

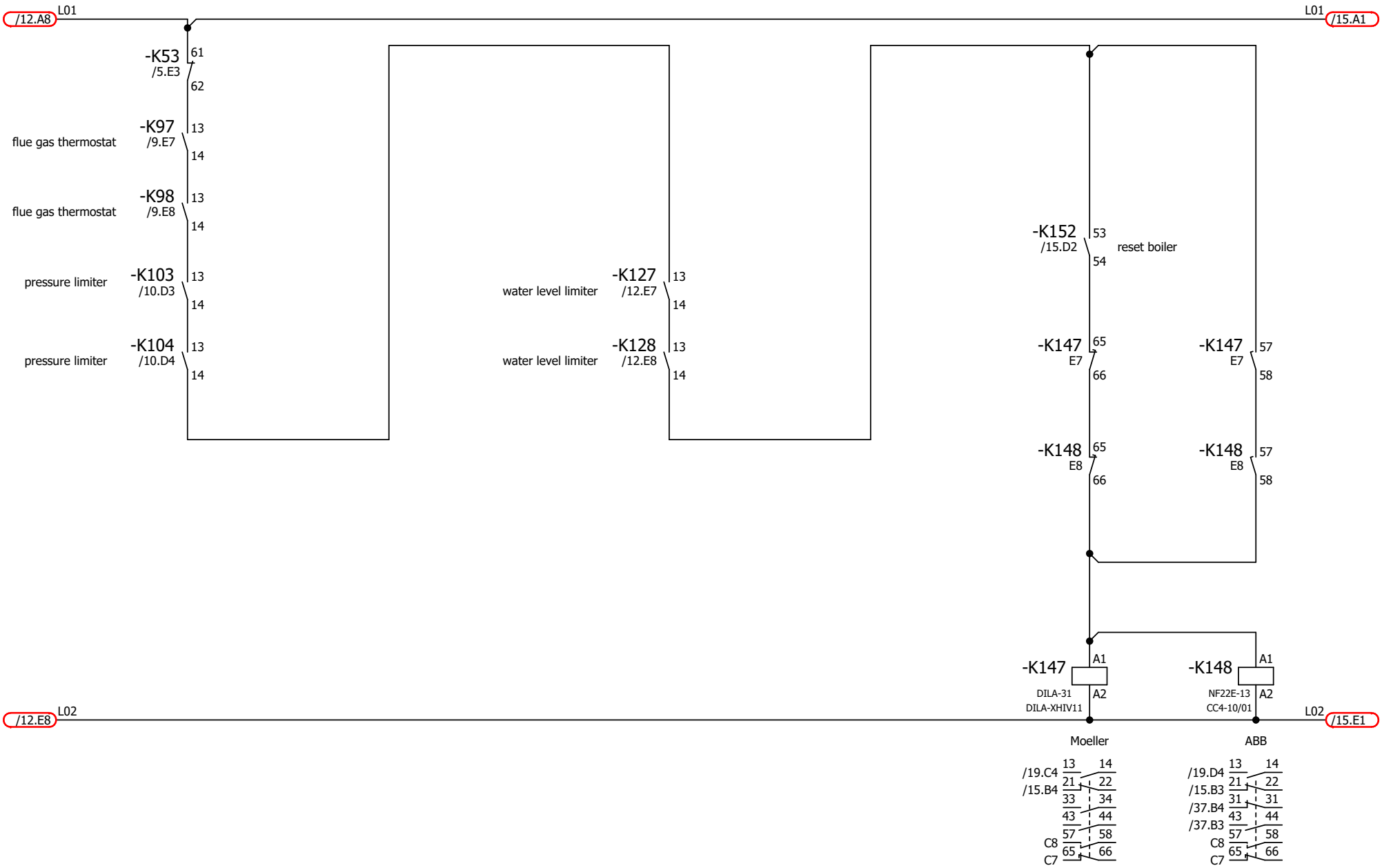

designed with ELCAD/AUCOPLAN (R) 7.11.0

			date	13.04.2018				wiring diagram SES-18-3876	
			proc.	E.H.				NUK-HP	
			rev.					3500	
alteration	date	name	norm		substitute through	substitute for	origin	95bar	10-9842
								safety circuit	

GekaKonus®

sheet 14
53 Bl.

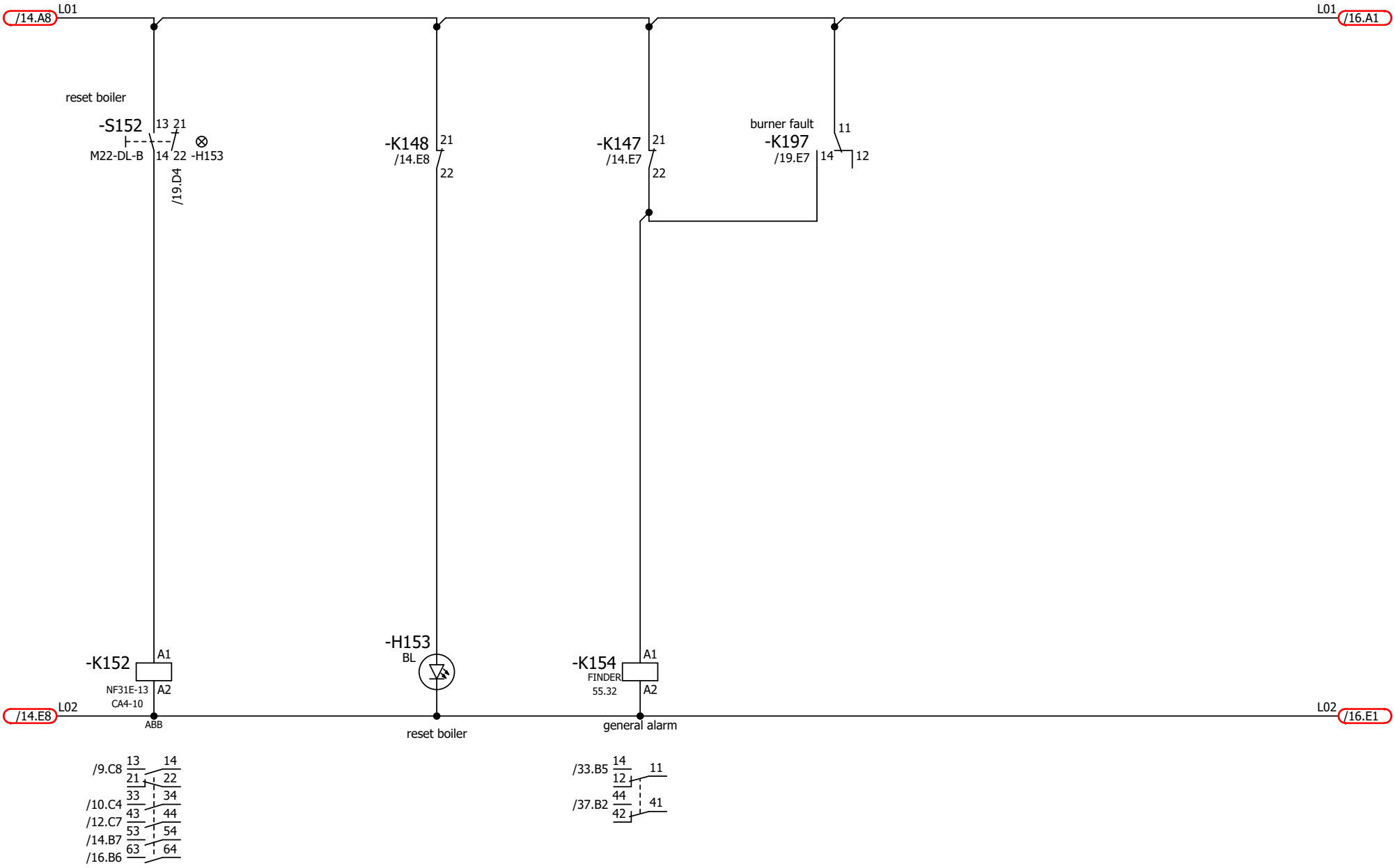

designed with ELCAD/AUCOPLAN (R) 7.11.0

				date	13.04.2018				wiring diagram SES-18-3876		
				proc.	E.H.				NUK-HP		
				rev.					3500		
alteration	date	name	norm			substitute through	substitute for	origin	95bar	10-9842	sheet 15
									safety circuit		53 Bl.

GekaKonus®

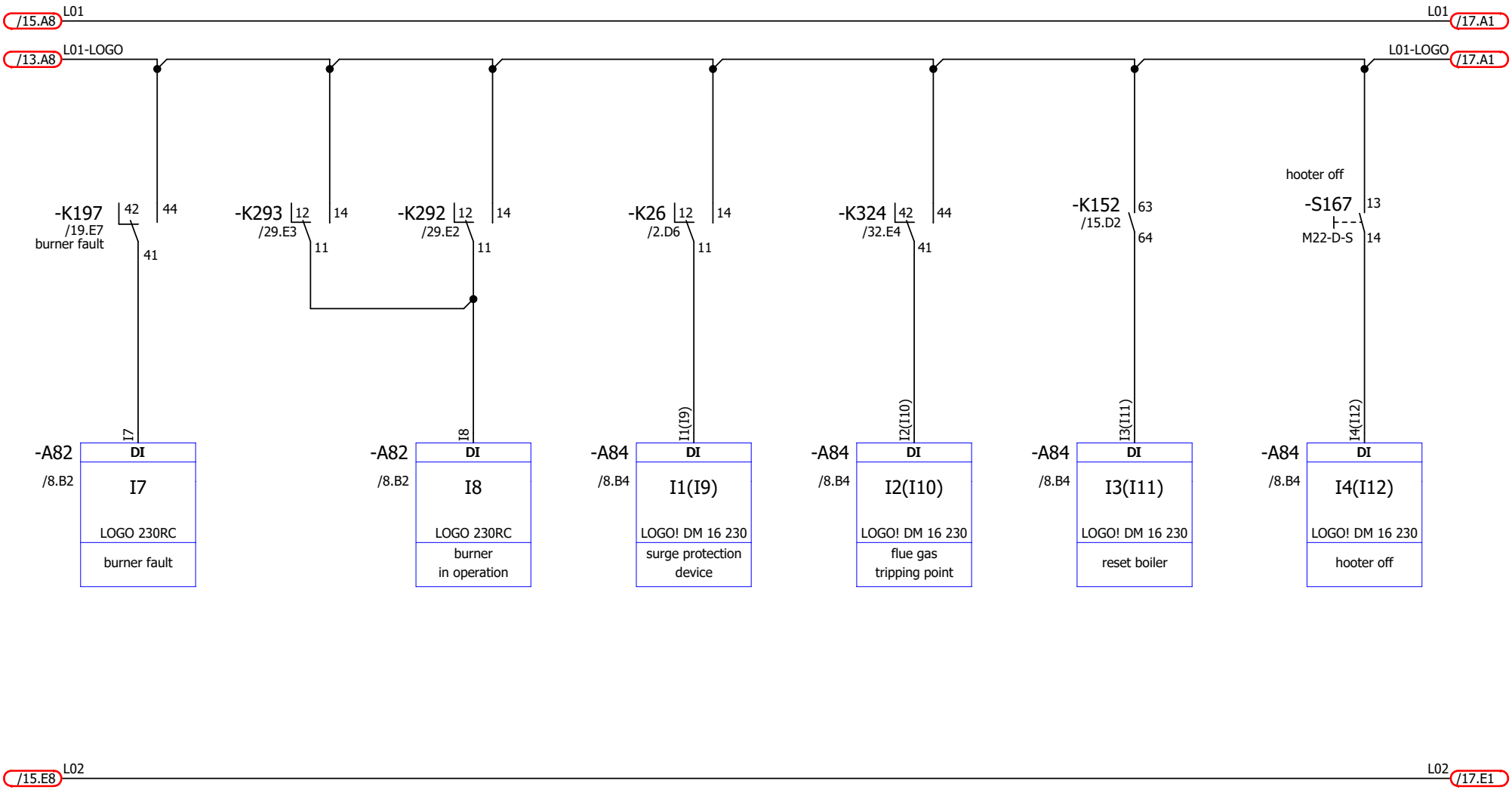

designed with ELCAD/AUCOPLAN (R) 7.11.0

				date	13.04.2018				wiring diagram SES-18-3876			
				proc.	E.H.				NUK-HP			
				rev.					3500			
alteration	date	name	norm			substitute through	substitute for	origin	95bar	10-9842	sheet 16	
									digital inputs LOGO-SPS		53 Bl.	

GekaKonus®

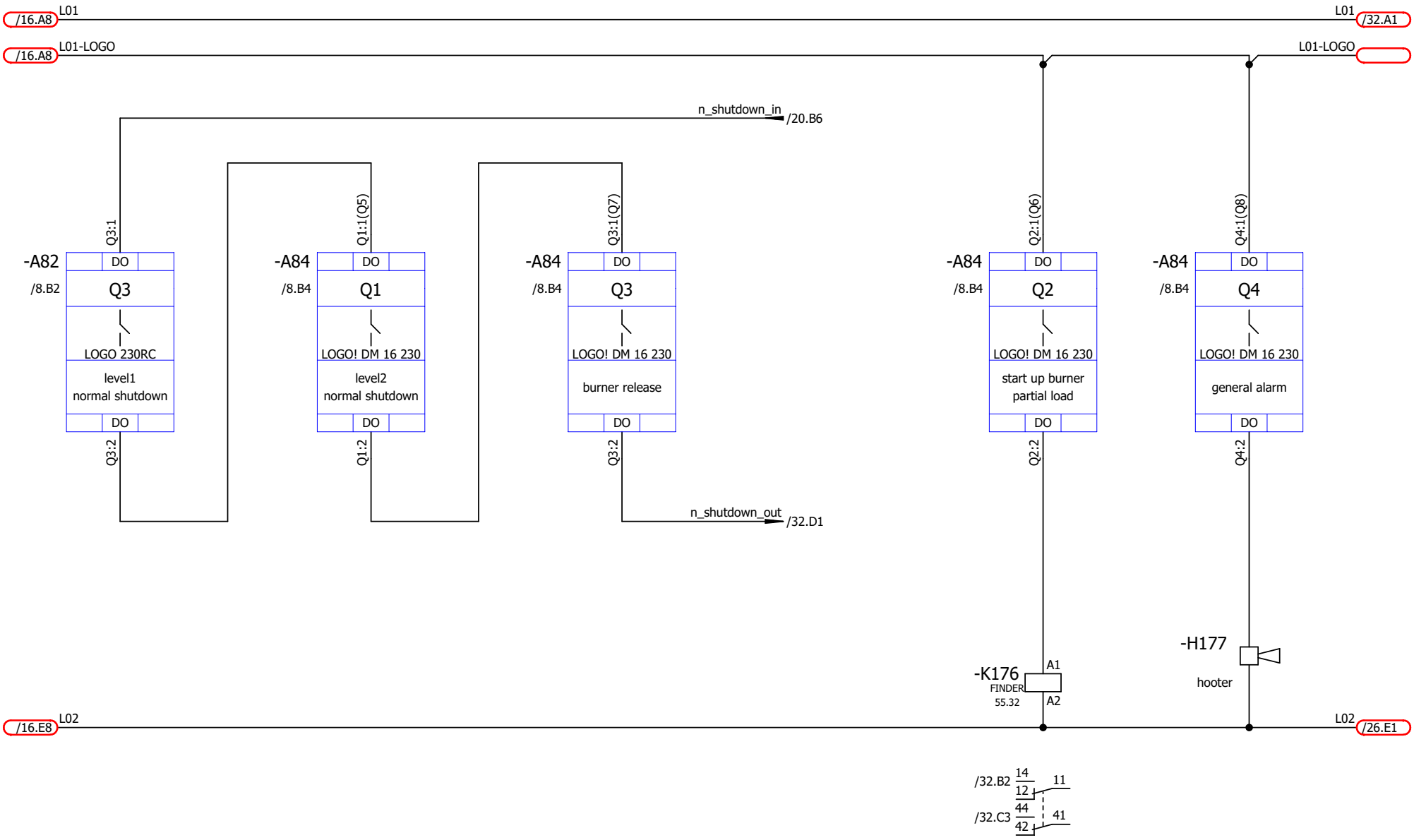

designed with ELCAD/AUCOPLAN (R) 7.11.0

			date	13.04.2018		GekaKonus®	wiring diagram SES-18-3876 NUK-HP 3500 95bar digital outputs LOGO-SPS		
			proc.	E.H.					
			rev.					10-9842	sheet 17
alteration	date	name	norm		substitute through	substitute for	origin		53 Bl.

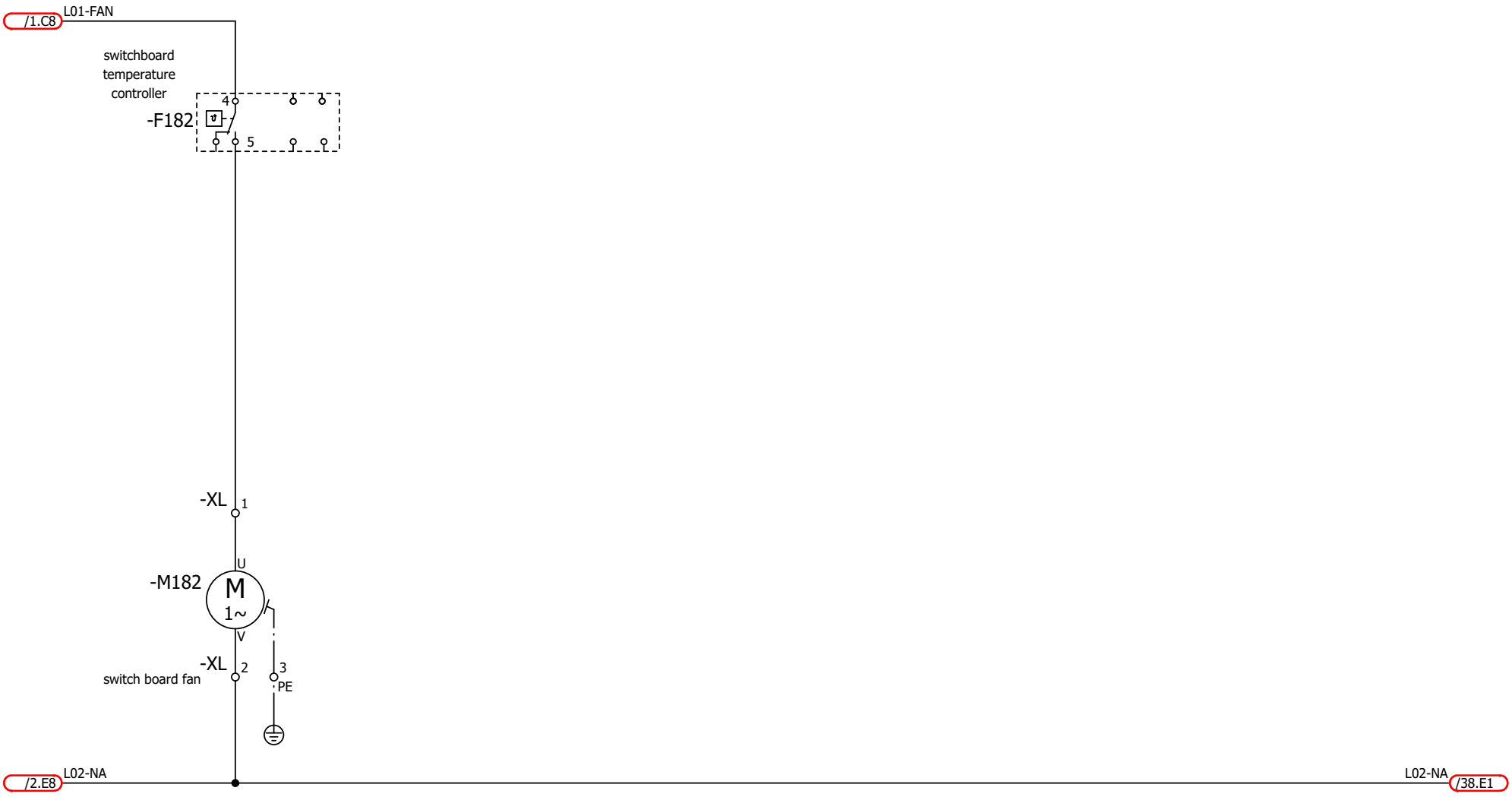

designed with ELCAD/AUCOPLAN (R) 7.11.0

				date	13.04.2018				wiring diagram SES-18-3876		
				proc.	E.H.				NUK-HP		
				rev.					3500		
alteration	date	name	norm			substitute through	substitute for	origin	95bar	10-9842	sheet 18
									switch board fan		53 Bl.

GekaKonus®

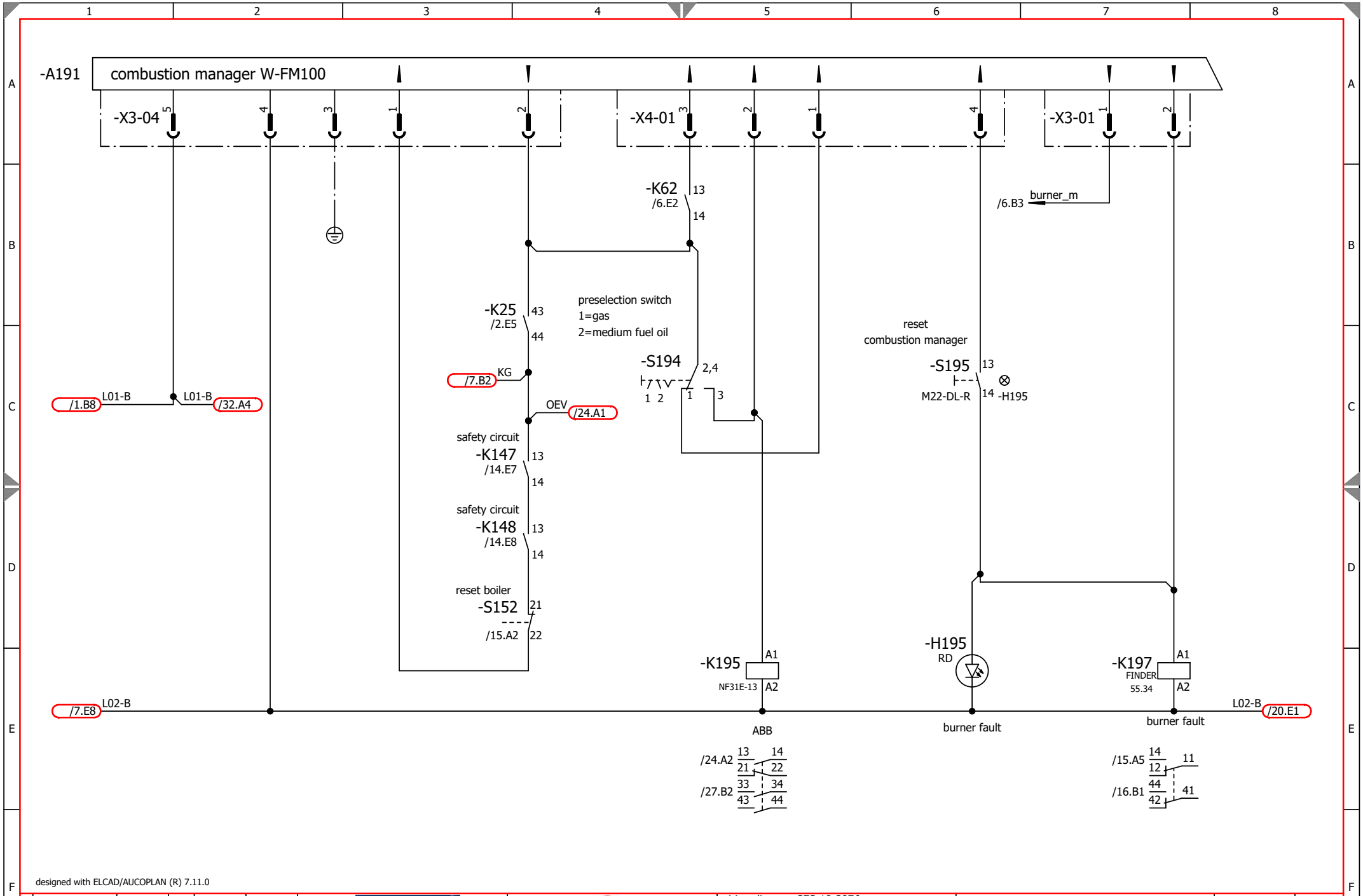

designed with ELCAD/AUCOPLAN (R) 7.11.0

				date	13.04.2018				wiring diagram SES-18-3876		
				proc.	E.H.				NUK-HP		
				rev.					3500		
alteration	date	name	norm			substitute through	substitute for	origin	95bar	10-9842	sheet 19
									burner control		53 Bl.

GekaKonus®

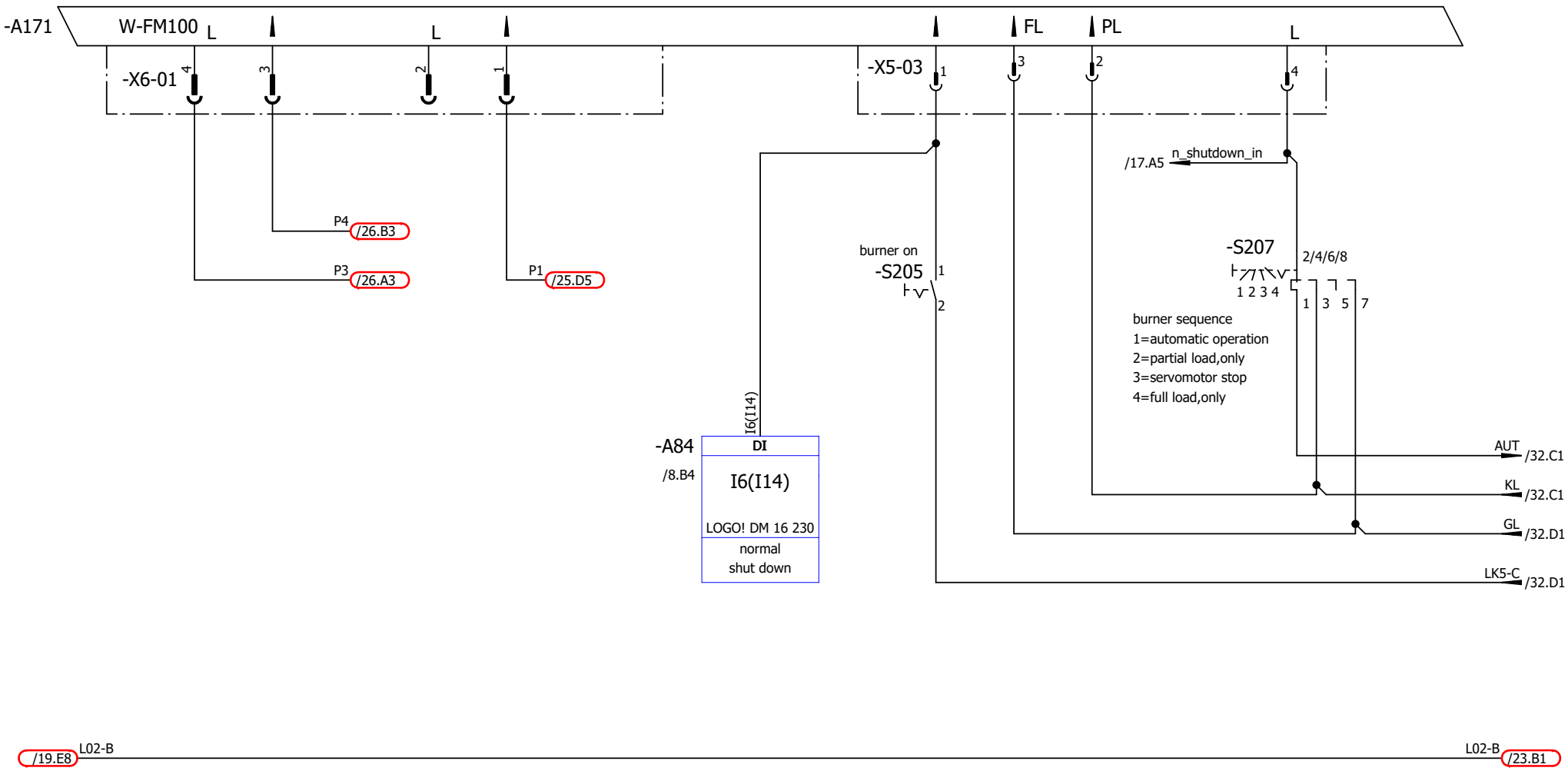

designed with ELCAD/AUCOPLAN (R) 7.11.0

				date	13.04.2018				wiring diagram SES-18-3876		
				proc.	E.H.				NUK-HP		
				rev.					3500		
alteration	date	name	norm			substitute through	substitute for	origin	95bar	10-9842	sheet 20
									burner control		53 Bl.

GekaKonus®

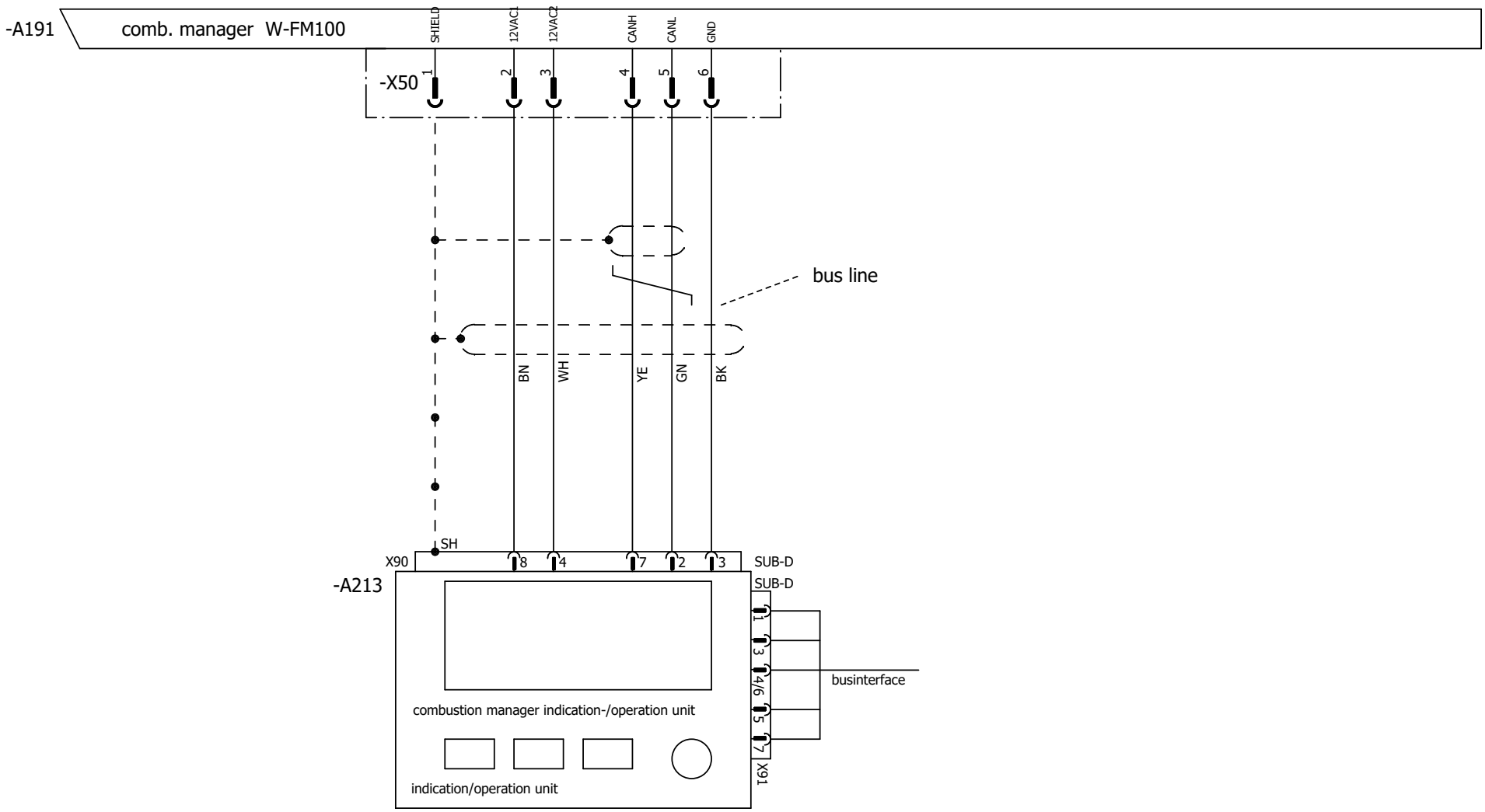

designed with ELCAD/AUCOPLAN (R) 7.11.0

			date	13.04.2018			wiring diagram SES-18-3876		
			proc.	E.H.		GekaKonus®	NUK-HP		
			rev.				3500		
alteration	date	name	norm		substitute through	substitute for	origin	95bar burner control	10-9842	sheet 21 53 Bl.

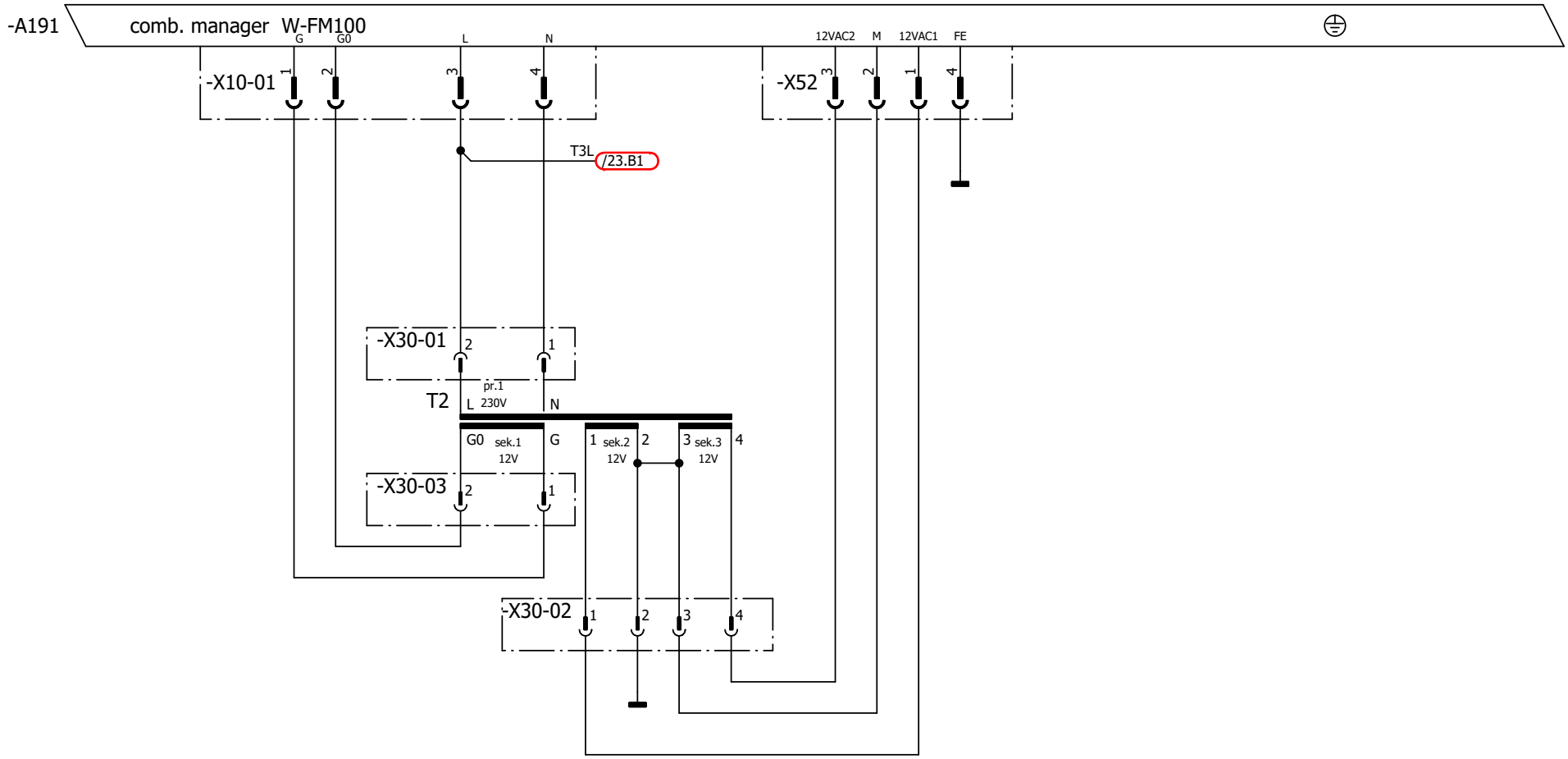

designed with ELCAD/AUCOPLAN (R) 7.11.0

			date	13.04.2018				wiring diagram SES-18-3876	
			proc.	E.H.				NUK-HP	
			rev.					3500	
alteration	date	name	norm		substitute through	substitute for	origin	95bar	10-9842
								burner control	

GekaKonus®

sheet 22
53 Bl.

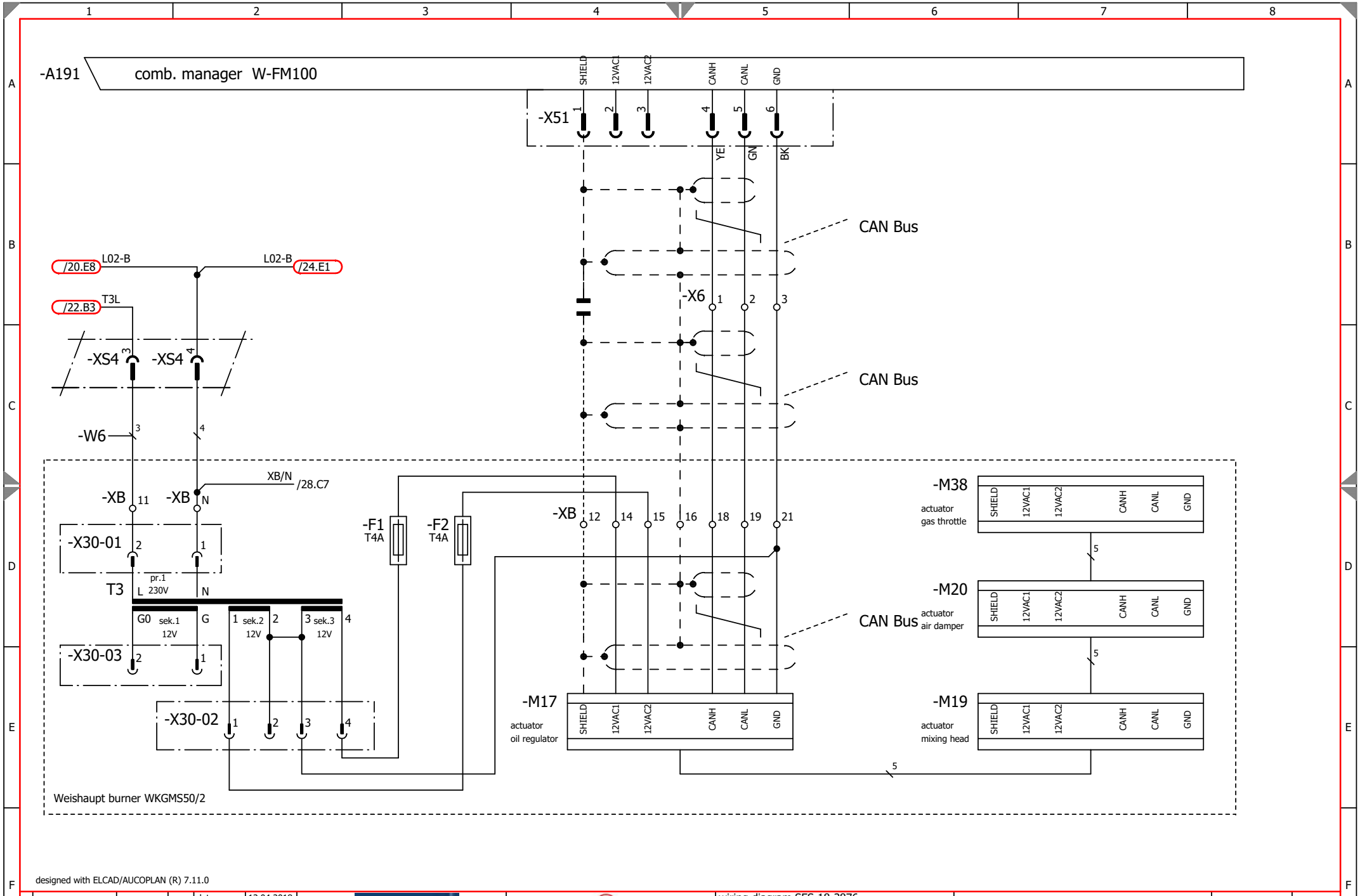

designed with ELCAD/AUCOPLAN (R) 7.11.0

			date	13.04.2018	GekaKonus®	wiring diagram SES-18-3876 NUK-HP 3500 95bar burner control	
			proc.	E.H.			
			rev.				
alteration	date	name	norm		substitute through / substitute for / origin		10-9842	sheet 23 / 53 Bl.

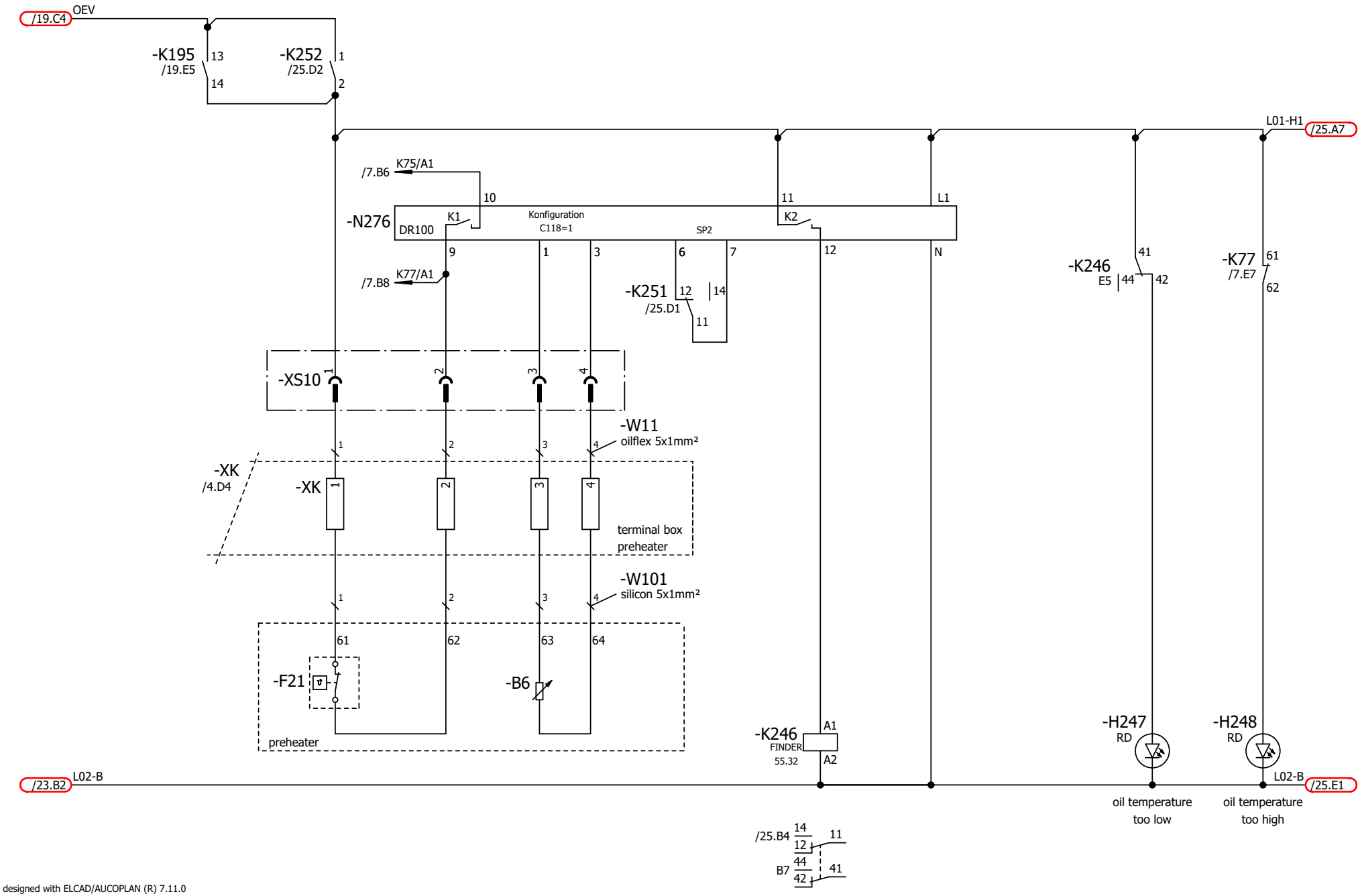

designed with ELCAD/AUCOPLAN (R) 7.11.0

			date	13.04.2018					
			proc.	E.H.					
			rev.						
alteration	date	name	norm		substitute through	substitute for	origin		

GekaKonus®

wiring diagram SES-18-3876
NUK-HP
3500
95bar
burner control

10-9842

sheet 24
53 Bl.

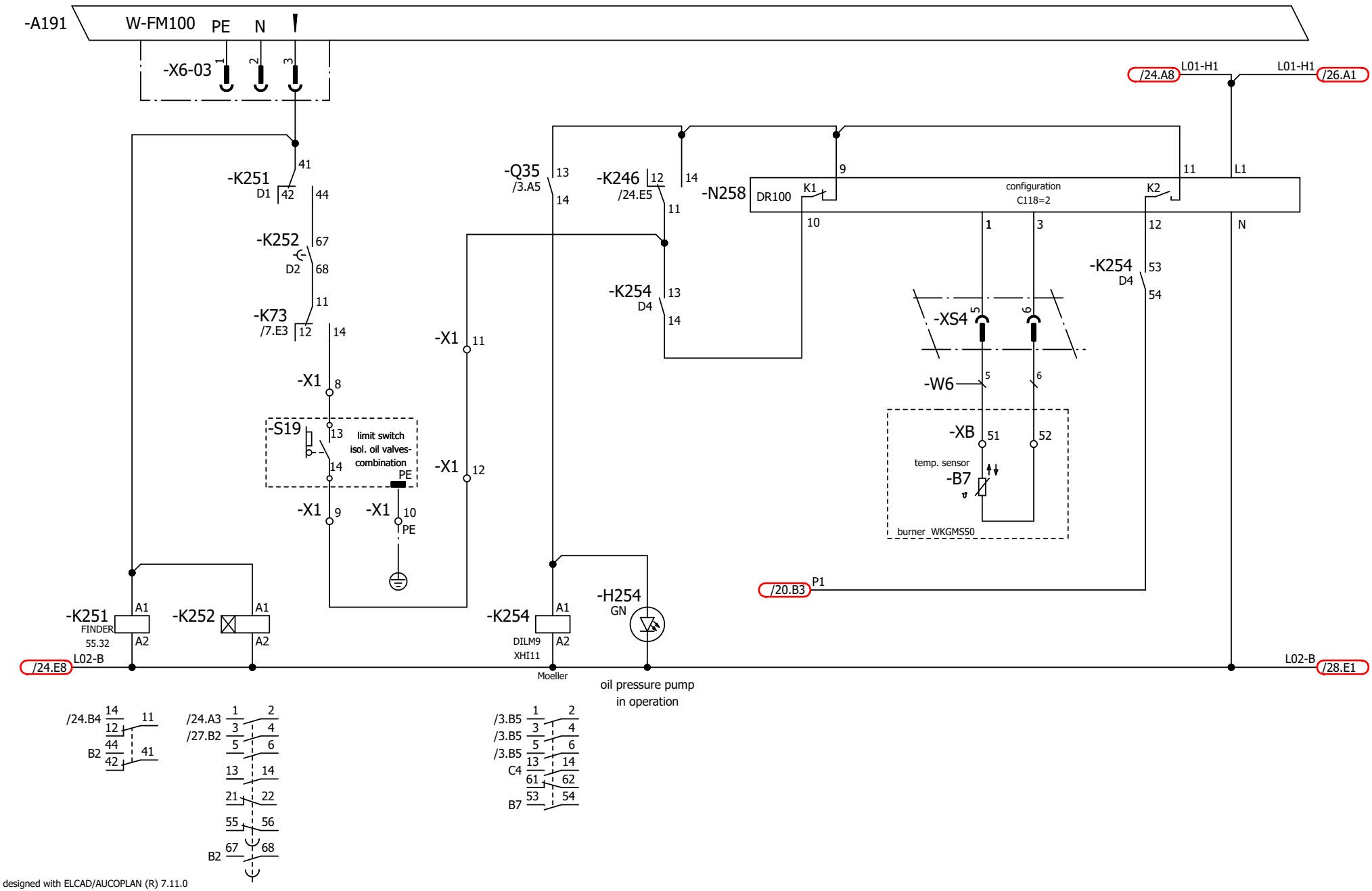

designed with ELCAD/AUCOPLAN (R) 7.11.0

				date	13.04.2018			wiring diagram SES-18-3876	
				proc.	E.H.			NUK-HP	
				rev.				3500	
alteration	date	name	norm		substitute through	substitute for	origin	95bar	10-9842
								burner control	

GekaKonus®

sheet 25
53 Bl.

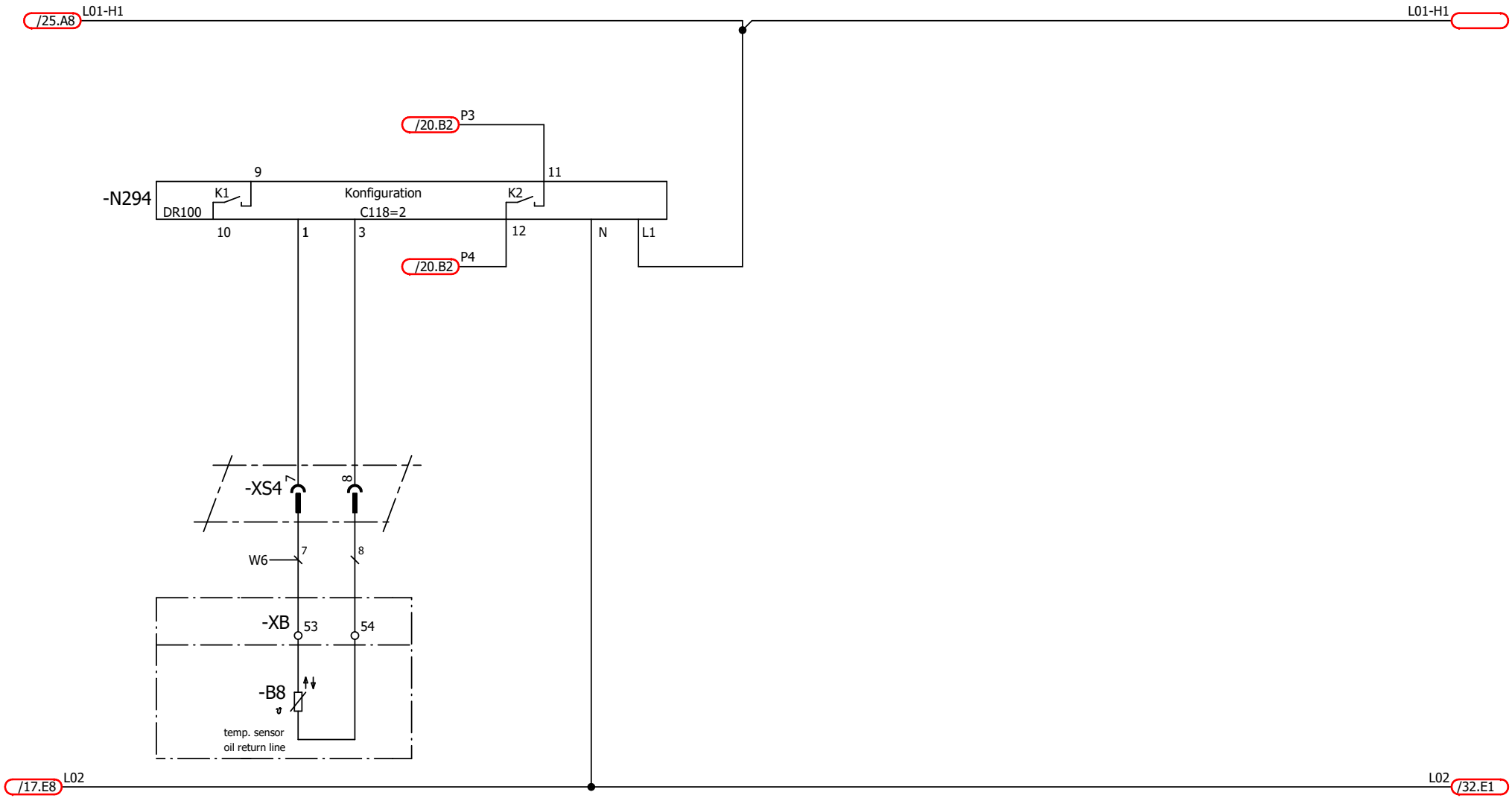

designed with ELCAD/AUCOPLAN (R) 7.11.0

				date	13.04.2018				wiring diagram SES-18-3876		
				proc.	E.H.				NUK-HP		
				rev.					3500		
alteration	date	name	norm			substitute through	substitute for	origin	95bar	10-9842	sheet 26
									burner control		53 Bl.

GekaKonus®

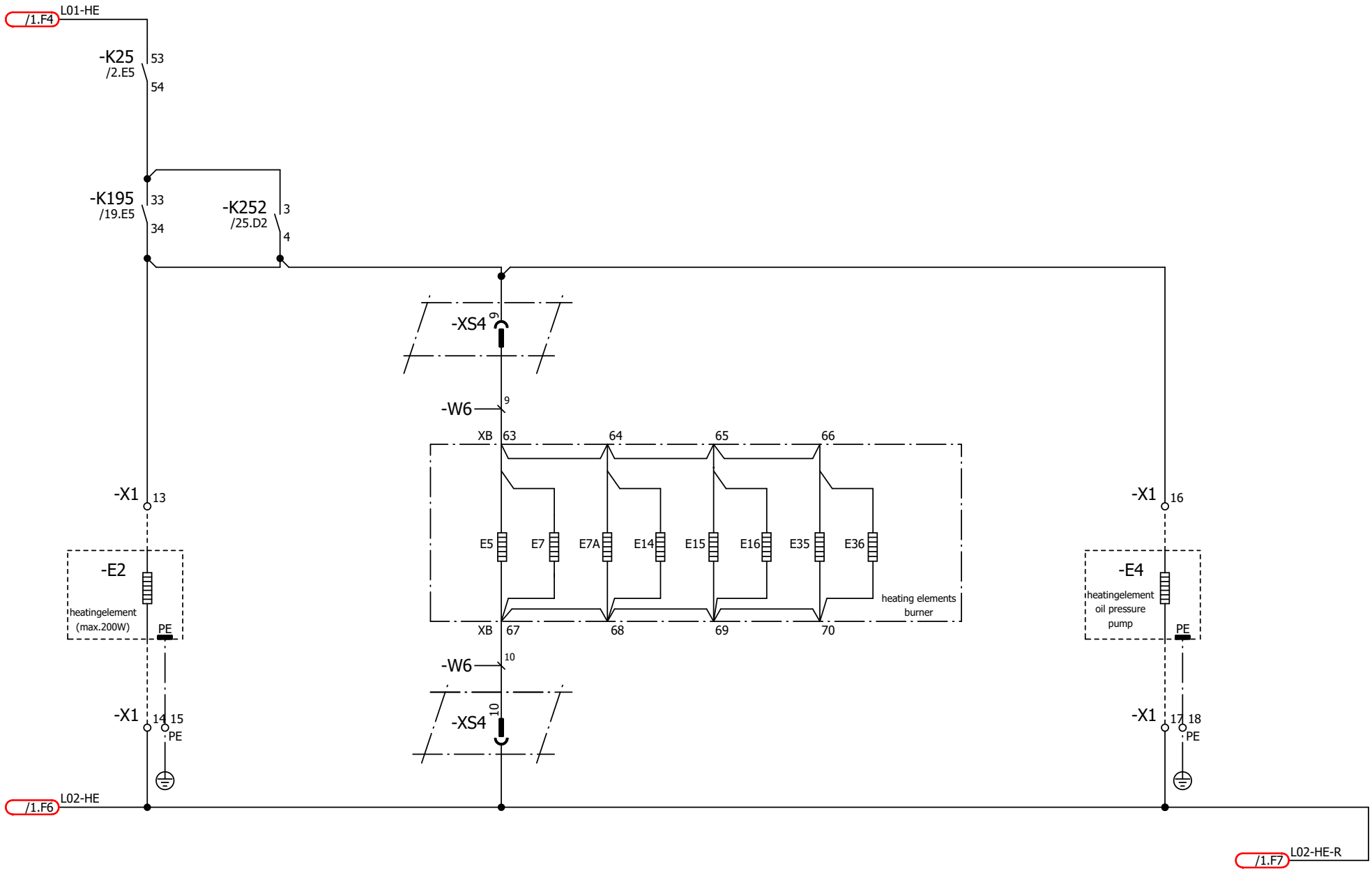

designed with ELCAD/AUCOPLAN (R) 7.11.0

				date	13.04.2018				wiring diagram SES-18-3876		
				proc.	E.H.				NUK-HP		
				rev.					3500		
alteration	date	name	norm			substitute through	substitute for	origin	95bar	10-9842	sheet 27
									burner control		53 Bl.

GekaKonus®

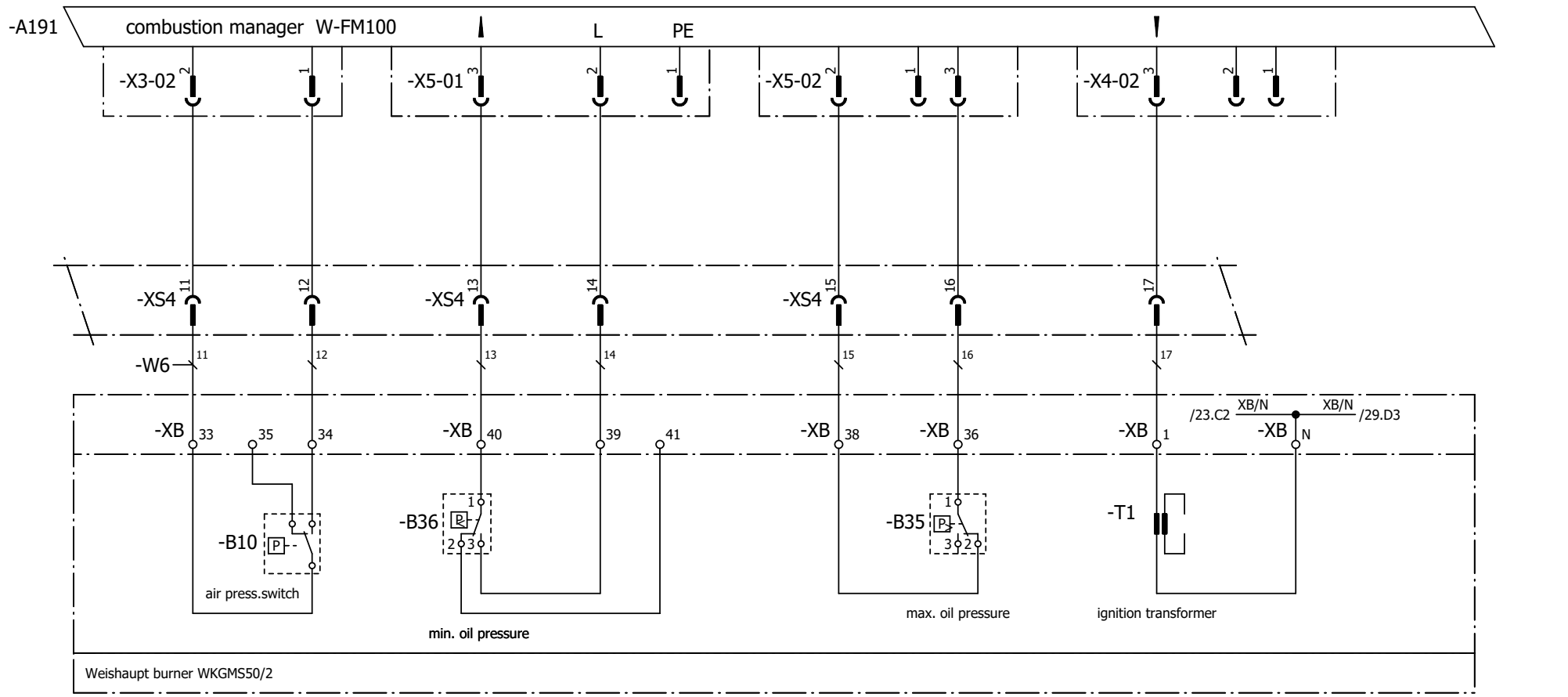

designed with ELCAD/AUCOPLAN (R) 7.11.0

			date	13.04.2018		GekaKonus®	wiring diagram SES-18-3876 NUK-HP 3500 95bar burner control		
			proc.	E.H.					
			rev.					10-9842	sheet 28
alteration	date	name	norm		substitute through	substitute for	origin		53 Bl.

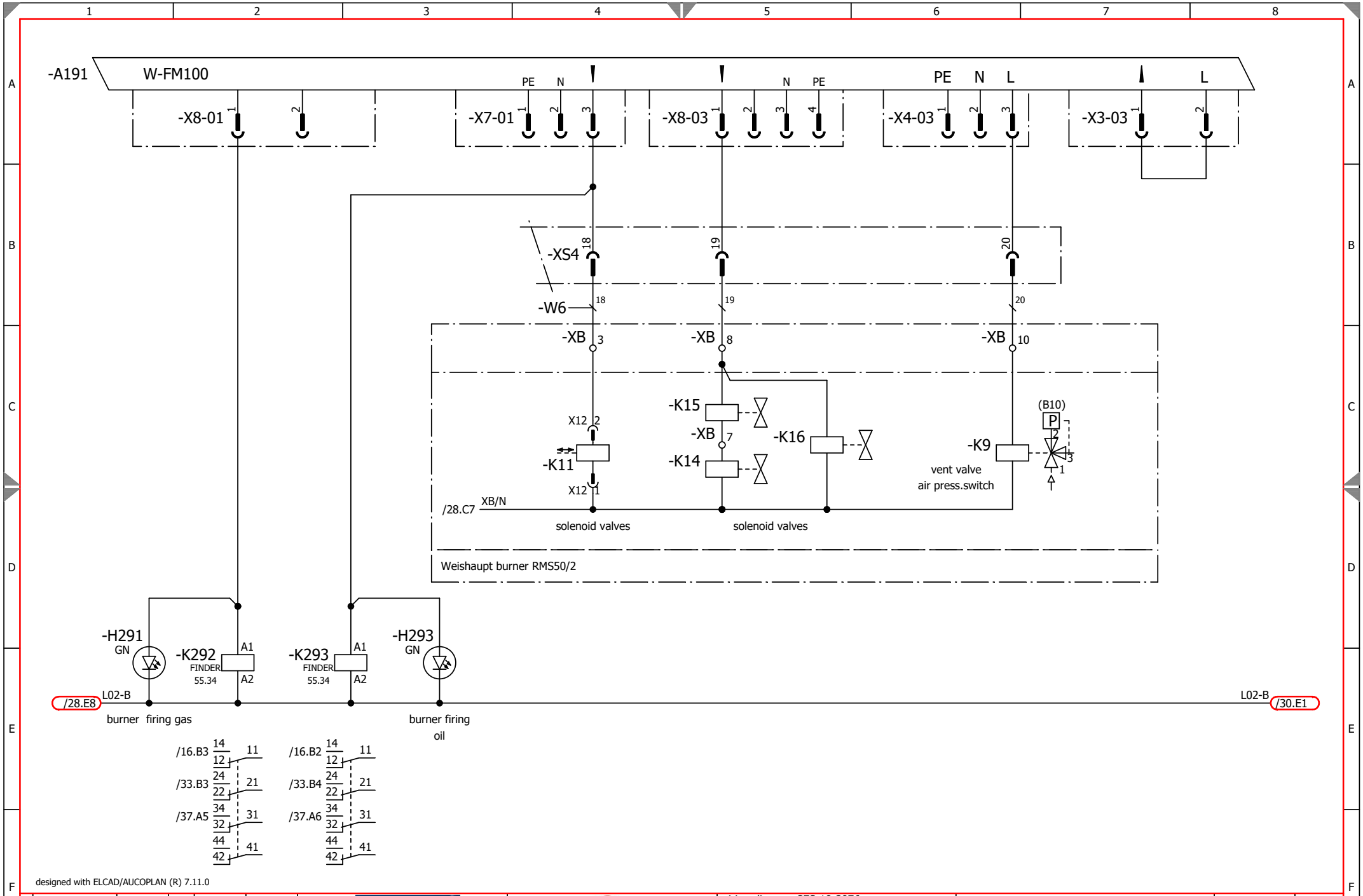

designed with ELCAD/AUCOPLAN (R) 7.11.0

			date	13.04.2018			wiring diagram SES-18-3876	
			proc.	E.H.		GekaKonus®	NUK-HP	
			rev.				3500	
alteration	date	name	norm		substitute through	substitute for	origin	95bar burner control	10-9842	sheet 29 / 53 Bl.

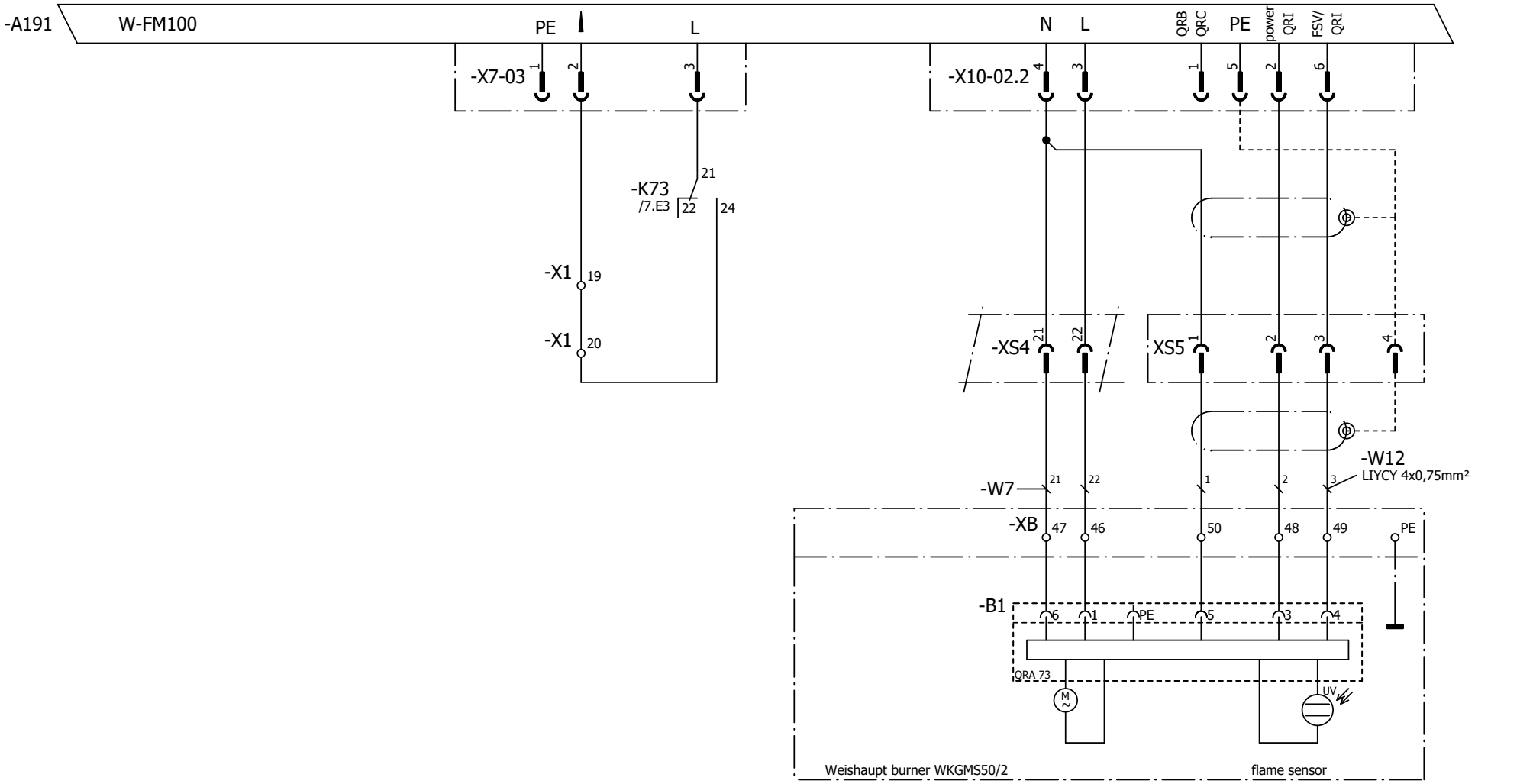

/29.E8 L02-B

L02-B /31.E1

designed with ELCAD/AUCOPLAN (R) 7.11.0

			date	13.04.2018		GekaKonus®	wiring diagram SES-18-3876 NUK-HP 3500 95bar burner control	
			proc.	E.H.				
			rev.					
alteration	date	name	norm		substitute through	substitute for	origin	10-9842	sheet 30 53 Bl.

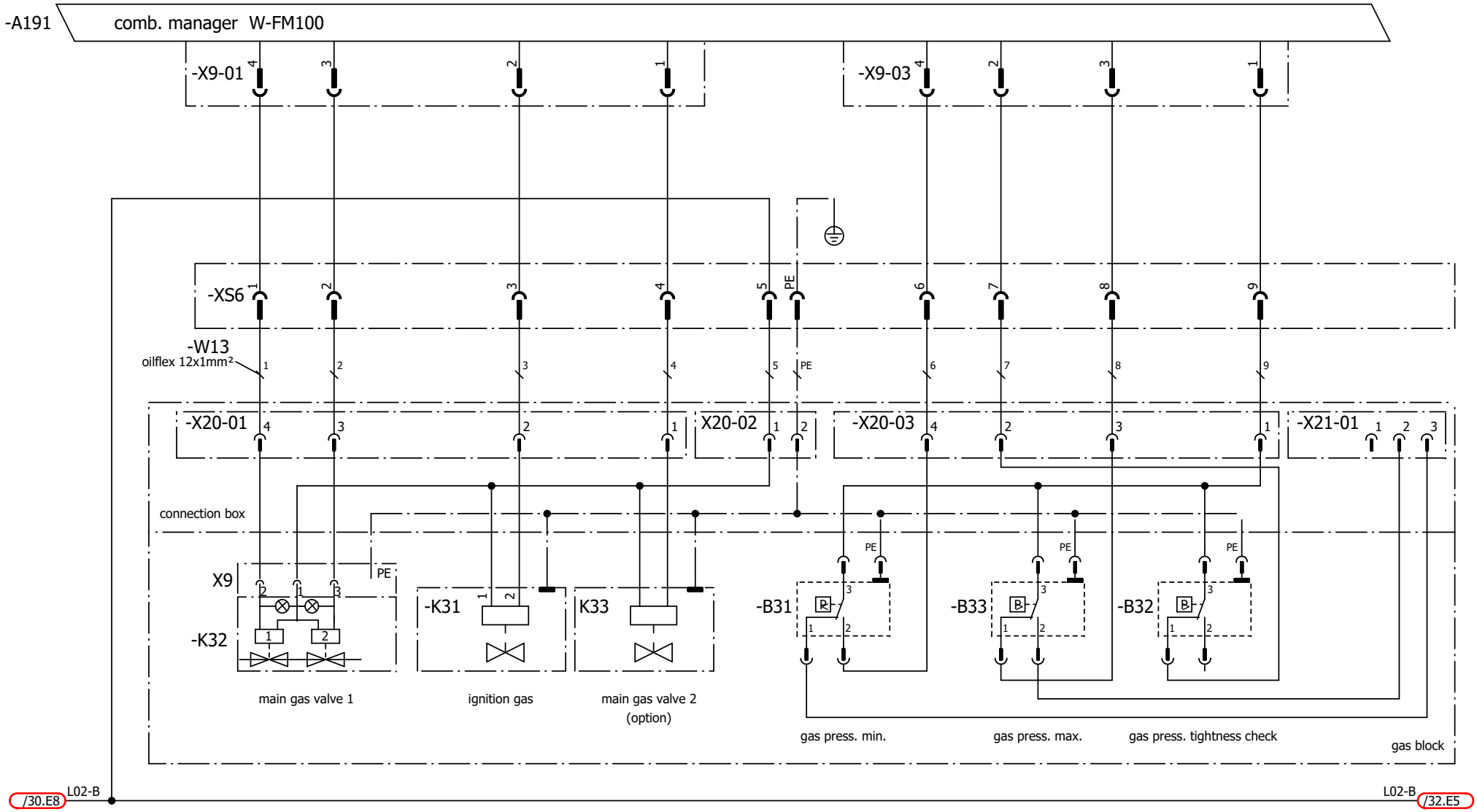

designed with ELCAD/AUCOPLAN (R) 7.11.0

			date	13.04.2018		GekaKonus®	wiring diagram SES-18-3876 NUK-HP 3500 95bar burner control		
			proc.	E.H.					
			rev.					10-9842	sheet 31
alteration	date	name	norm		substitute through	substitute for	origin		53 Bl.

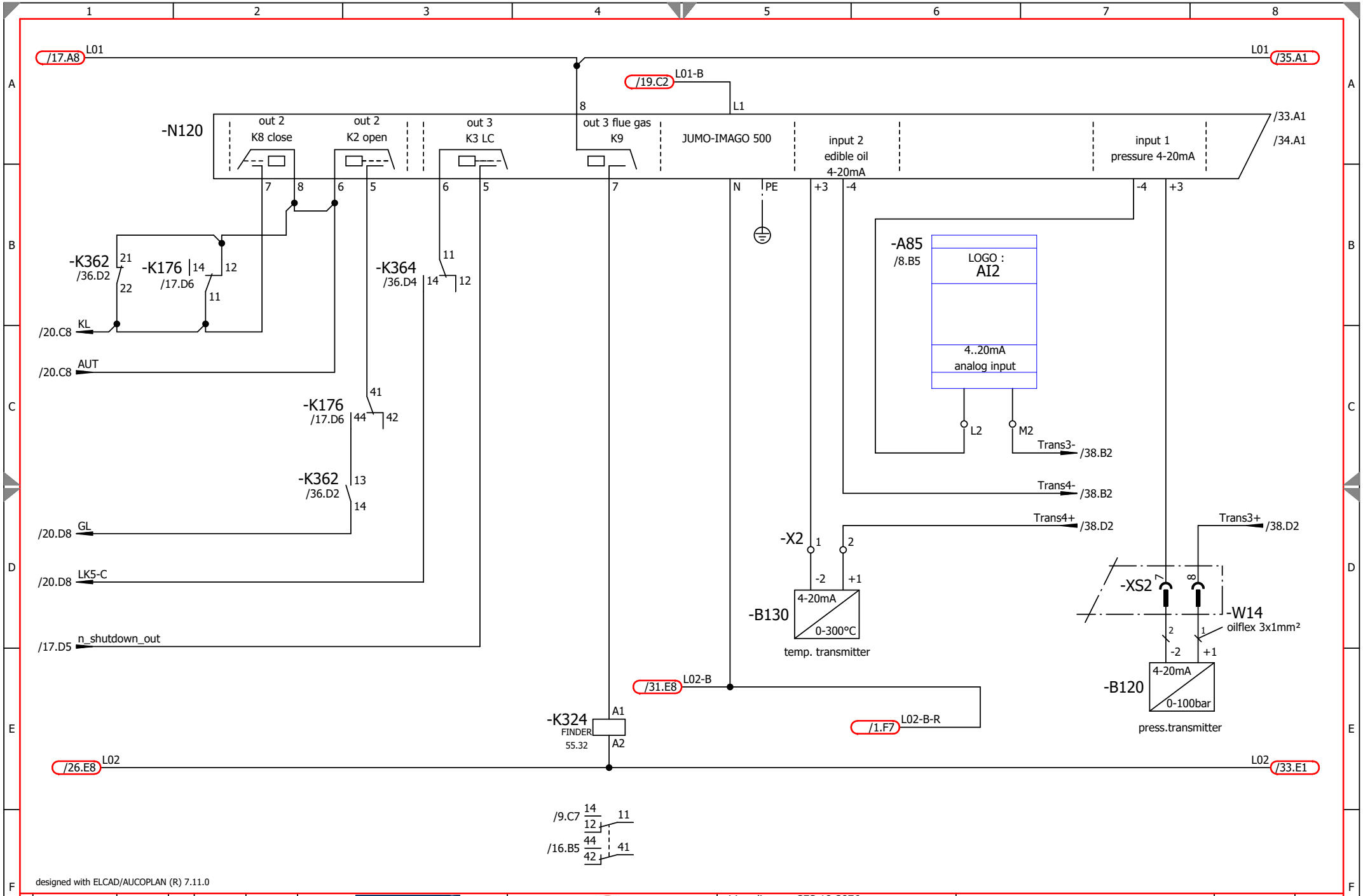
/17.A8 L01
L01 /35.A1
/19.C2 L01-B
L1
-N120
out 2
K8 close
out 2
K2 open
out 3
K3 LC
out 3 flue gas
K9
JUMO-IMAGO 500
input 2
edible oil
4-20mA
input 1
pressure 4-20mA
/33.A1
/34.A1
N
PE
+3
-4
-K362
/36.D2
-K176
/17.D6
-K364
/36.D4
/20.C8 KL
/20.C8 AUT
-K176
/17.D6
-K362
/36.D2
/20.D8 GL
/20.D8 LK5-C
/17.D5 n_shutdown_out
-A85
/8.B5
LOGO :
AI2
4..20mA
analog input
L2
M2
Trans3-
/38.B2
Trans4-
/38.B2
Trans4+
/38.D2
Trans3+
/38.D2
-X2
-B130
4-20mA
0-300°C
temp. transmitter
-XS2
-W14
oilflex 3x1mm²
-B120
4-20mA
0-100bar
press.transmitter
/31.E8 L02-B
/1.F7 L02-B-R
-K324
FINDER
55.32
A1
A2
/26.E8 L02
L02 /33.E1
/9.C7
/16.B5
designed with ELCAD/AUCOPLAN (R) 7.11.0
date 13.04.2018
proc. E.H.
rev.
alteration
date
name
norm
substitute through
substitute for
origin
GekaKonus®
wiring diagram SES-18-3876
NUK-HP
3500
95bar
burner control
10-9842
sheet 32
53 Bl.

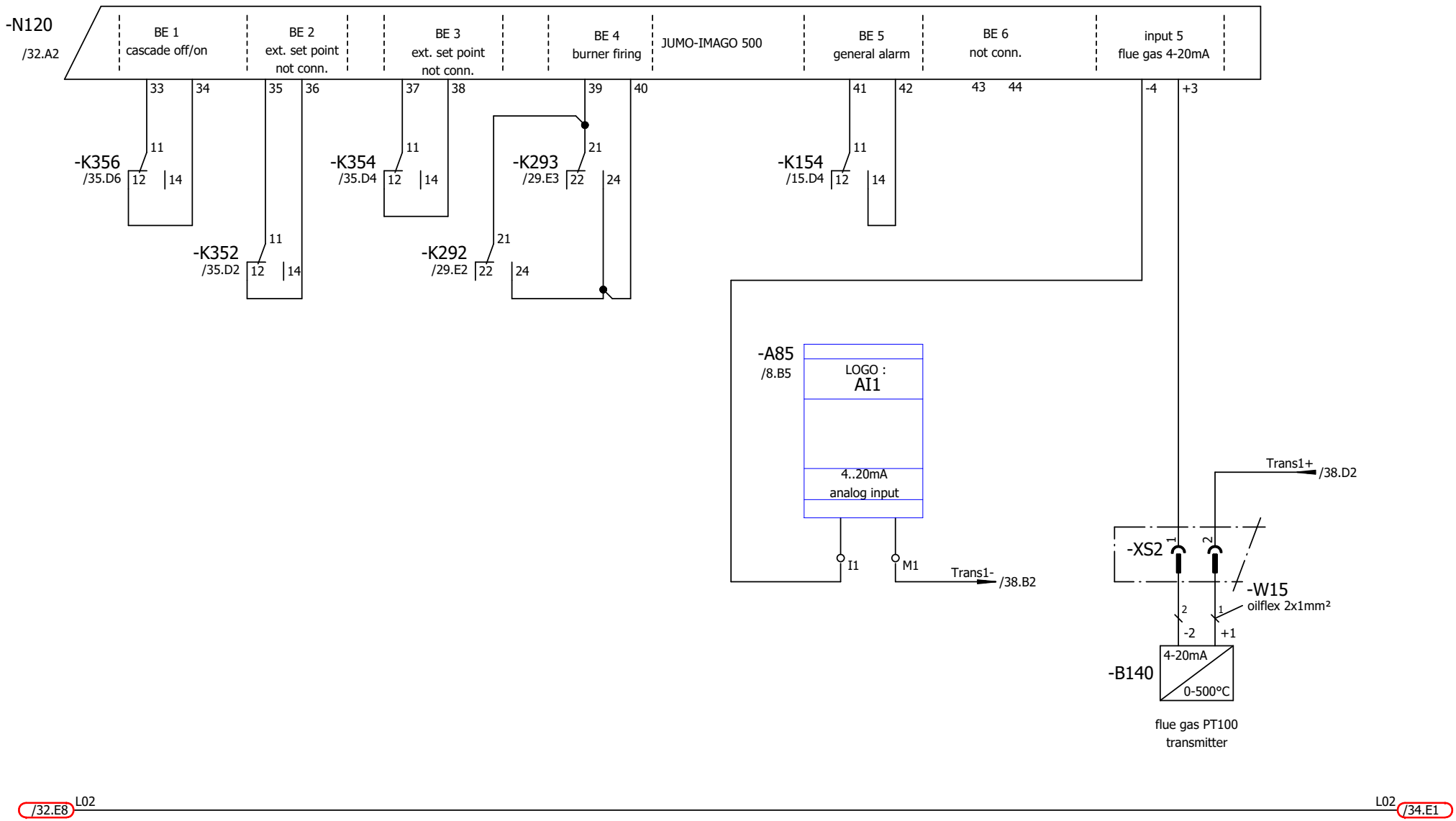

designed with ELCAD/AUCOPLAN (R) 7.11.0

			date	13.04.2018			wiring diagram SES-18-3876		
			proc.	E.H.		GekaKonus®	NUK-HP		
			rev.				3500		
alteration	date	name	norm		substitute through	substitute for	origin	95bar	10-9842	sheet 33
								burner control		53 Bl.

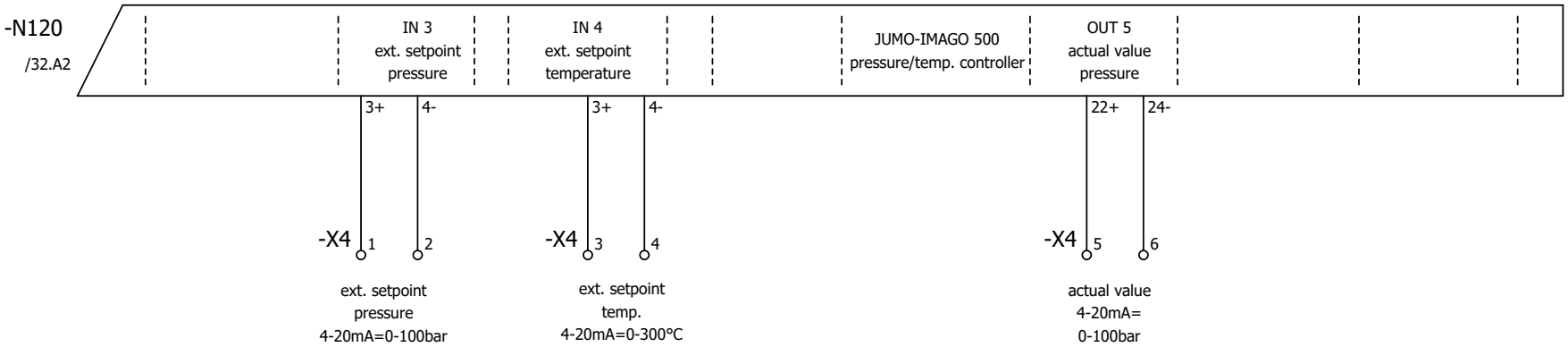

/33.E8 L02 ——— L02 /35.E1

designed with ELCAD/AUCOPLAN (R) 7.11.0

			date	13.04.2018				wiring diagram SES-18-3876	
			proc.	E.H.				NUK-HP	
			rev.					3500	
alteration	date	name	norm		substitute through	substitute for	origin	95bar	10-9842
								burner control	

GekaKonus®

sheet 34
53 Bl.

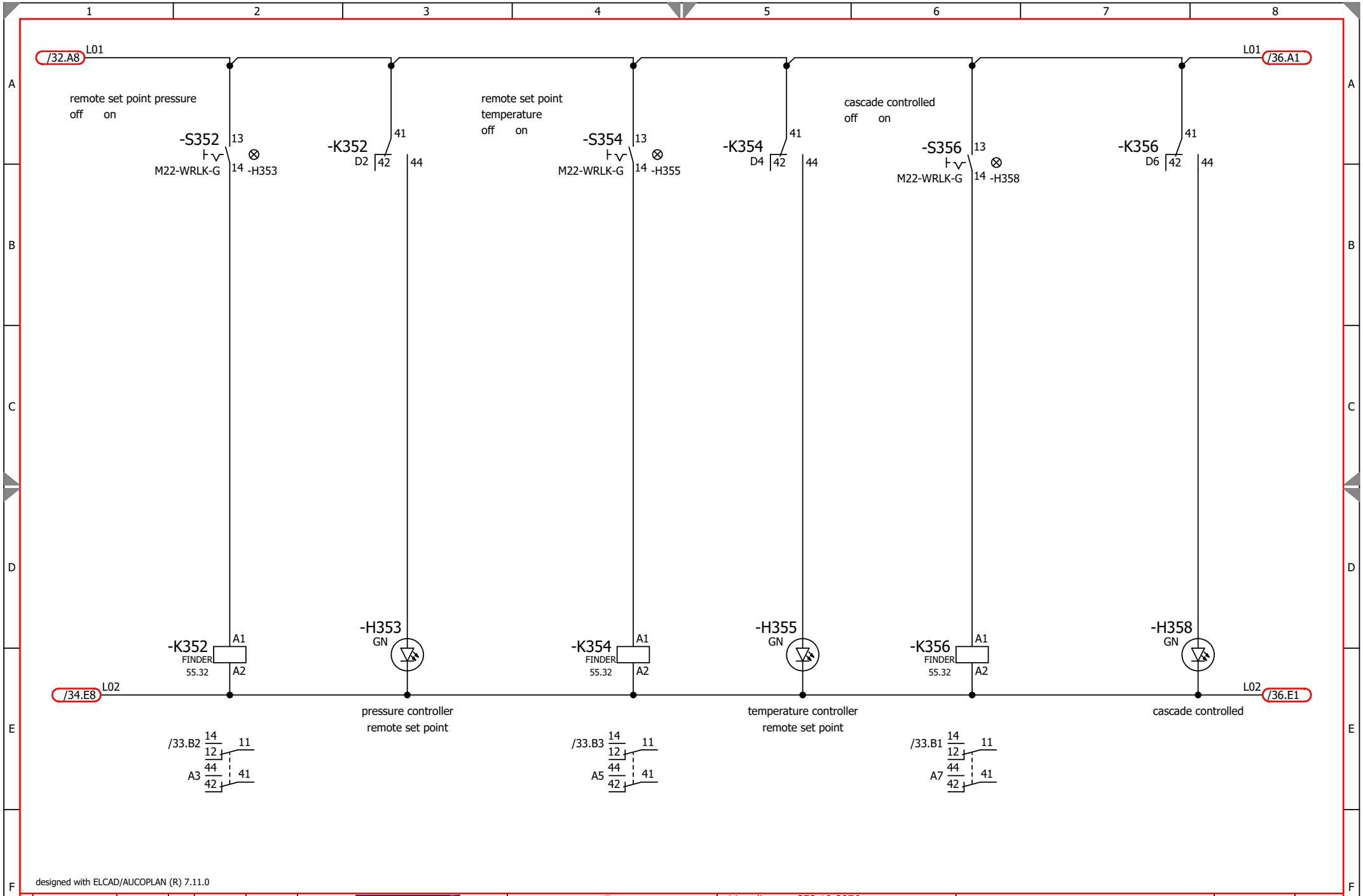

designed with ELCAD/AUCOPLAN (R) 7.11.0

			date	13.04.2018				wiring diagram SES-18-3876	
			proc.	E.H.				NUK-HP	
			rev.					3500	
alteration	date	name	norm		substitute through	substitute for	origin	95bar	10-9842
								burner control	

GekaKonus®

sheet 35
53 Bl.

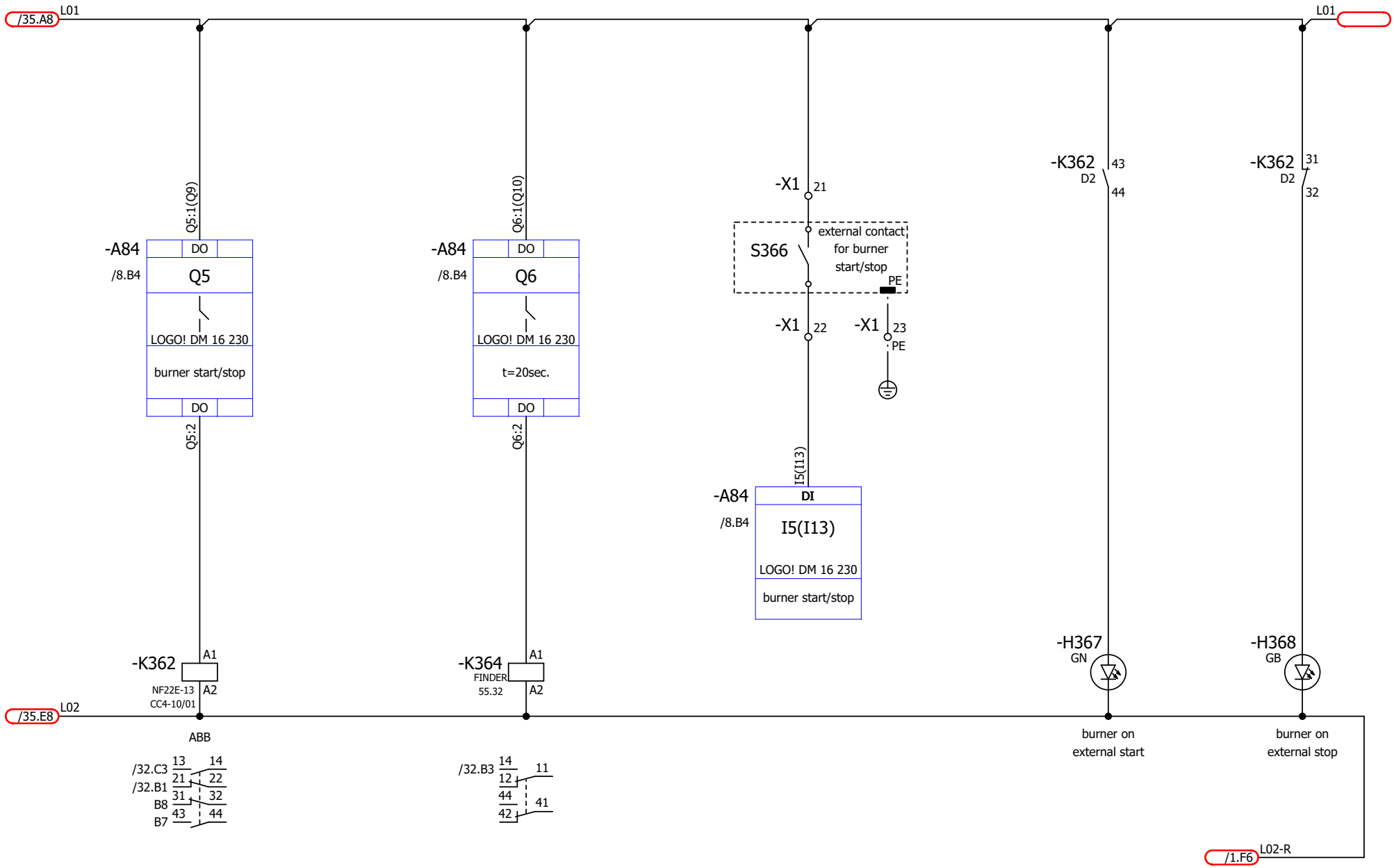

designed with ELCAD/AUCOPLAN (R) 7.11.0

				date	13.04.2018				wiring diagram SES-18-3876		
				proc.	E.H.				NUK-HP		
				rev.					3500		
alteration	date	name	norm			substitute through	substitute for	origin	95bar	10-9842	sheet 36
									messages		53 Bl.

GekaKonus®

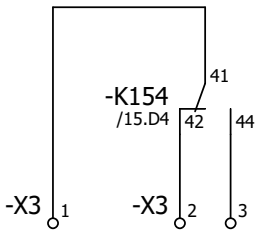

general alarm

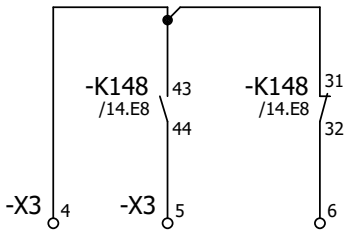

burner ready for operation
(in stand by position)

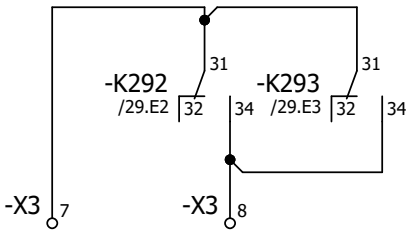

burner in operation

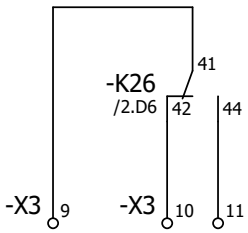

surge protection device
fault

designed with ELCAD/AUCOPLAN (R) 7.11.0

			date	13.04.2018				wiring diagram SES-18-3876	
			proc.	E.H.				NUK-HP	
			rev.					3500	
alteration	date	name	norm		substitute through	substitute for	origin	95bar	10-9842
								pot. free cont.	

GekaKonus®

sheet 37
53 Bl.

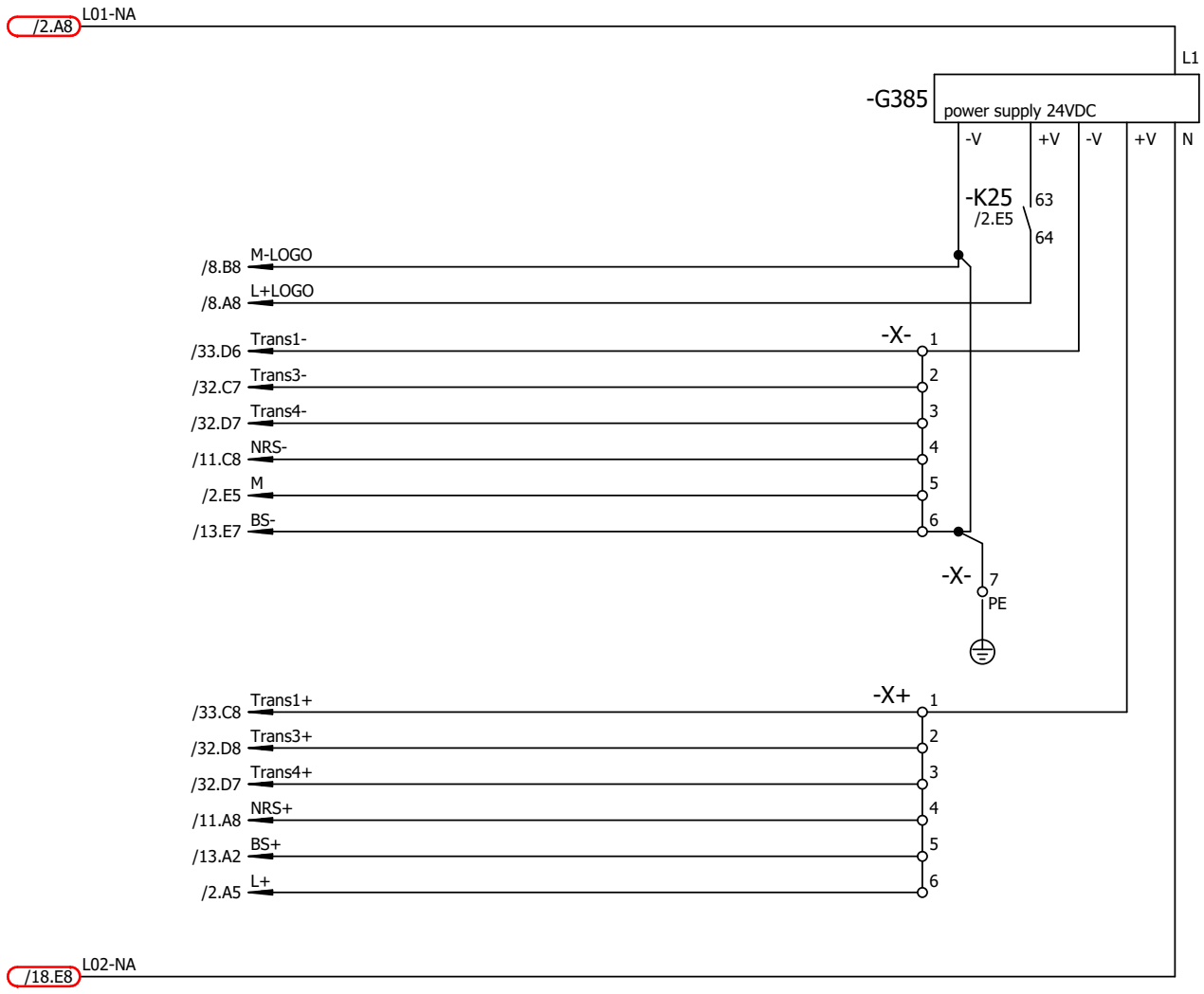

designed with ELCAD/AUCOPLAN (R) 7.11.0

			date	13.04.2018		GekaKonus®	wiring diagram SES-18-3876	
			proc.	E.H.			NUK-HP	
			rev.				3500	
alteration	date	name	norm		substitute through	substitute for	origin	95bar control voltage 24VDC

10-9842

sheet 38
53 Bl.

designed with ELCAD/AUCOPLAN (R) 7.11.0

				date	13.04.2018				wiring diagram SES-18-3876		
				proc.	E.H.				NUK-HP		
				rev.					3500		
	alteration	date	name	norm		substitute through	substitute for	origin	95bar	10-9842	sheet 39
									spare		53 Bl.

GekaKonus®

designed with AUCOTEC-ELCAD (R) 7.11.0

appliance comment	cable mark extern	target mark extern: appliance mark	target mark extern: connection mark	connection strip: terminal number	connection strip: type	connection strip: fish joint	connection strip: wire connection	connection strip: terminal comment	connection strip: representation placet	target mark intern: appliance mark	target mark intern: connection mark	cable mark intern	appliance comment
				strip terminal : -XP									
				totality : 7									
pot. free cont.	X	-FV		1		●		L1	/1.D1	-Q11	2		
"	X			1		●		L1	/1.D1	-F13	L1		
"	X	-FV		2		●		L2	/1.D1	-Q11	4		
"	X			2		●		L2	/1.D2	-F13	L2		
"	X	-FV		3		●		L3	/1.D2	-Q11	6		
"	X			3		●		L3	/1.D2	-F13	L3		
"	X	PE		4				PE	/1.D2				
				strip terminal : -X1									
				totality : 23									
control voltage	X	L01		1					/1.E5	-F15.1			
"	X	L02		2		●			/1.E5	-K25	34		
"	X	L02-R		3		●			/1.E6				
"	X	L02-HE		4		●			/1.E6				
"	X	L02-HE-R		5		●			/1.E7				
"	X	L02-B		6		●			/1.E7	PE			
"	X	L02-B-R		7		●			/1.E7				
limswitchoilvalves	X	-S19	13	8					/25.C3	-K73	24		
"	X	-S19	14	9		●			/25.D3				
"	X	-S19	PE	10		●		PE	/25.D3	-S19			
				11		●			/25.C3	-K246	41		
				12		●			/25.D3				
heatingelement	X	-E2		13		●			/27.D2	-K252	4		
"	X	-E2		14		●			/27.E2	L02-HE			
"	X	-E2	PE	15		●		PE	/27.E2	-E2	PE		
heatingelement	X	-E4		16		●			/27.D7	-E4			
oil pressure pump	X	-E4		17					/27.E7	L02-HE			
"	X	-E4	PE	18				PE	/27.E7	PE			
				19		●			/30.B4	-X7-03	2		
				20		●			/30.C4	-K73	34		
ext.contact	X	-S366		21					/36.B5	L01			
for burner	X	-S366		22					/36.C5	-A84	I5(I13)		
start/stop	X	-S366	PE	23				PE	/36.C6	-S366			
				strip terminal : -X2									
				totality : 2									
temp. transmitter	X	-B130	-2	1					/32.D5	-N120	+3		
"	X	-B130	+1	2					/32.D5	Trans4+			
				strip terminal : -X3									
				totality : 11									
pot. free cont.	X			1					/37.B1	-K154	41		
"	X			2					/37.B2	-K154	42		
"	X			3					/37.B2	-K154	44		
"	X			4					/37.B3	-K148	43		
"	X			5					/37.B3	-K148	44		
"	X			6					/37.B4	-K148	32		
"	X			7					/37.B5	-K292	31		
"	X			8					/37.B5	-K292	34		
"	X			9					/37.B6	-K26	41		
"	X			10					/37.B7	-K26	42		
"	X			11					/37.B7	-K26	44		

alteration	date	name	norm	substitute through	substitute for	origin
		proc.	E.H.	13.04.2018		
		rev..				

GekaKonus®

wiring diagram SES-18-3876
NUK-HP
3500
95bar
-XP,-X1,-X2,-X3

10-9842

shett 40
53 Bl.

designed with AUCOTEC-ELCAD (R) 7.11.0

appliance comment	cable mark extern						-CAN bus cable 6x1 mm²	target mark extern appliance mark	target mark extern connection mark	connection strip terminal number	connection strip type	connection strip fish joint	connection strip wire connection	connection strip terminal comment	connection strip representation placet	target mark intern appliance mark	target mark intern connection mark	cable mark intern							appliance comment
										strip terminal : -X4															
										totality : 6															
input 4-20mA							X			1					/34.B2	-N120	3+								
ext. set point press.							X			2					/34.B2	-N120	4-								
input 4-20mA							X			3					/34.B3	-N120	3+								
ext. set point temp.							X			4					/34.B3	-N120	4-								
output 4-20mA							X			5					/34.B5	-N120	22+								
act. value press.							X			6					/34.B6	-N120	24-								
										strip terminal : -X6															
										totality : 3															
actuators burner								-XB	18	1					/23.B5	-X51	4								
"								-XB	19	2					/23.B5	-X51	5								
"								-XB	21	3					/23.B5	-X51	6								
										strip terminal : -XL															
										totality : 3															
switch board fan							YW	-M182	U	1					/18.C2	-F182	5								
"							GN	-M182	V	2					/18.D2	L02-NA									
"							BK	-M182	PE	3				PE	/18.D2	-M182									
										strip terminal : -XN															
										totality : 5															
emergency stop							X	-S22.1	11	1					/2.C2	-S22	12								
"							X	-S22.1	12	2					/2.C2	-K23	S11								
"							X	-S22.1	21	3					/2.C2	-S22	22								
"							X	-S22.1	22	4					/2.C2	-K23	S12								
"							X	-S22.1	PE	5				PE	/2.C2	-S22.1									

alteration		
date		
name norm	rev..	date
	proc.	13.04.2018
	E.H.	

substitute through

substitute for

origin

GekaKonus®

wiring diagram SES-18-3876
NUK-HP
3500
95bar
-X4,-X6,-XL,-XN

10-9842

shett 41
53 Bl.

designed with AUCOTEC-ELCAD (R) 7.11.0

appliance comment	cable mark extern: -W15 oilflex 2x1 mm²	-W14 oilflex 3x1 mm²	-W10 oilflex 3x1 mm²	-W9 oilflex 4x0,75 mm²	-W8 oilflex 4x0,75 mm²	-W7 oilflex 3x1 mm²	-W4 oilflex 7x6 mm²	target mark extern: appliance mark	connection mark	connection strip: terminal number	type	fish joint	wire connection	terminal comment	representation placet	target mark intern: appliance mark	connection mark	cable mark intern	appliance comment
										strip terminal : -XS1									
										totality : 7									
burner motor							1	-M110	U1	1					/4.D2	-K62	2		
"							2	-M110	V1	2					/4.D2	-K62	4		
"							3	-M110	W1	3					/4.D2	-K62	6		
"							4	-M110	W2	4					/4.D2	-K65	2		
"							5	-M110	U2	5					/4.D3	-K65	4		
"							6	-M110	V2	6					/4.D3	-K65	6		
"							PE	-M110	PE	PE					/4.D3	PE			
										strip terminal : -XS2									
										totality : 10									
flue gas transmitter			2					-B140	-2	1					/33.D7	-N120	+3		
"			1					-B140	+1	2					/33.D7	Trans1+			
rupture disk				1				-F120	1	3					/13.B2	BS+			
"				2				-F120	4	4					/13.B3				
										5					/13.B4				
										6					/13.B5	-K135	A1		
press.transmitter		2						-B120	-2	7					/32.D7	-N120	+3		
"		1						-B120	+1	8					/32.D8	Trans3+			
pressure limiter						1		-F102	1	10					/10.A2	L01			
"						2		-F102	3	11					/10.A2	-K152	33		
										strip terminal : -XS3									
										totality : 10									
level electr. 1					1			-B100		1					/11.D3	-F100	3		
"					2			-B100	1	2					/11.D3	-F100	4		
"					3			-B100	2	3					/11.D3	-F100	2		
"					gg			-B100	3	4					/11.D3	-F100	1		
"					SH			-B100		5					/11.D3				
level electr. 2				1				-B101		6					/11.D4	-F100	11		
"				2				-B101	1	7					/11.D4	-F100	12		
"				3				-B101	2	8					/11.D4	-F100	10		
"				gg				-B101	3	9					/11.D5	-F100	9		
"				SH				-B101		10					/11.D5				

alteration			
date			
name		proc.	13.04.2018
norm		rev..	E.H.

substitute through

substitute for

origin

GekaKonus®

wiring diagram SES-18-3876
NUK-HP
3500
95bar
-XS4,-XS5,-XS6,-XS7,-XS8,-XS9

10-9842

shett 42
53 Bl.

designed with AUCOTEC-ELCAD (R) 7.11.0

appliance comment	cable mark extern								target mark extern		connection strip					target mark intern		cable mark intern							appliance comment
						-W13 oilflex 12x1 mm²	-W12 LIYCY 4x0,75 mm²	-W6 oilflex 25x1 mm²	appliance mark	connection mark	terminal number	type	fish joint	wire connection	terminal comment	representation placet	appliance mark	connection mark								
											strip terminal : -XS4														
											totality : 22														
burner								1	-XB	43	1				/7.C3	-K73	11								
"								2	-XB	42	2				/7.D3	-K73	A1								
"								3	-XB	11	3				/23.C1	T3L									
"								4	-XB	N	4				/23.C2	L02-B									
"								5	-XB	51	5				/25.C6	-N258	1								
"								6	-XB	52	6				/25.C6	-N258	3								
"								7	-XB	53	7				/26.C2	-N294	1								
"								8	-XB	54	8				/26.C2	-N294	3								
"								9	-XB	63	9				/27.C3	-K195	34								
"								10	-XB	67	10				/27.E3	L02-HE									
"								11	-XB	33	11				/28.B2	-X3-02	2								
"								12	-XB	34	12				/28.B2	-X3-02	1								
"								13	-XB	40	13				/28.B3	-X5-01	3								
"								14	-XB	39	14				/28.B4	-X5-01	2								
"								15	-XB	38	15				/28.B5	-X5-02	2								
"								16	-XB	36	16				/28.B5	-X5-02	3								
"								17	-XB	1	17				/28.B6	-X4-02	3								
"								18	-XB	3	18				/29.B4	-H293									
"								19	-XB	8	19				/29.B5	-X8-03	1								
"								20	-XB	10	20				/29.B6	-X4-03	3								
"								21	-XB	47	21				/30.C6	-X10-02.2	4								
"								22	-XB	46	22				/30.C6	-X10-02.2	3								
											strip terminal : -XS5														
											totality : 4														
flame sensor							1		-XB	50	1				/30.C7	-XS4	21								
"							2		-XB	48	2				/30.C7	-X10-02.2	2								
"							3		-XB	49	3				/30.C7	-X10-02.2	6								
"							SH		SH		4				/30.C8										
											strip terminal : -XS6														
											totality : 10														
gas terminal box						1			-X20-01	4	1				/31.B2	-X9-01	4								
"						2			-X20-01	3	2				/31.B2	-X9-01	3								
"						3			-X20-01	2	3				/31.B3	-X9-01	2								
"						4			-X20-01	1	4				/31.B4	-X9-01	1								
"						5			-X20-02	1	5				/31.B5	L02-B									
"						6			-X20-03	4	6				/31.B5	-X9-03	4								
"						7			-X20-03	2	7				/31.B6	-X9-03	2								
"						8			-X20-03	3	8				/31.B6	-X9-03	3								
"						9			-X20-03	1	9				/31.B7	-X9-03	1								
"						PE			-X20-02	2	PE				/31.B5	PE									

alteration			
date			
name norm	rev..	proc.	date
		E.H.	13.04.2018
substitute through			
substitute for			
origin			

GekaKonus®

wiring diagram SES-18-3876
NUK-HP
3500
95bar
-XS4,-XS5,-XS6

10-9842

shett 43
53 Bl.

designed with AUCOTEC-ELCAD (R) 7.11.0

appliance comment	cable mark extern -W11 oilflex 5x1 mm²	-W5 oilflex 4x6 mm²	-W3 oilflex 4x1,5 mm²	-W2 oilflex 4x1,5 mm²	target mark extern appliance mark	connection mark	connection strip terminal number	type	fish joint	wire connection	terminal comment	representation placet	target mark intern appliance mark	connection mark	cable mark intern	appliance comment
							strip terminal : -XS7									
							totality : 4									
preheater		1			-XK	L1	1					/4.D5	-K75	2		
"		2			-XK	L2	2					/4.D5	-K75	4		
"		3			-XK	L3	3					/4.D5	-K75	6		
"		PE			-XK	PE	PE					/4.D5	PE			
							strip terminal : -XS8									
							totality : 4									
cooling air fan			1		-M130	U1	1					/3.D7	-K72	2		
"			2		-M130	V1	2					/3.D7	-K72	4		
"			3		-M130	W1	3					/3.D7	-K72	6		
"			PE		-M130	PE	PE					/3.D7	PE			
							strip terminal : -XS9									
							totality : 4									
oil pressure pump				1	-M120	U1	1					/3.D5	-K254	2		
"				2	-M120	V1	2					/3.D5	-K254	4		
"				3	-M120	W1	3					/3.D5	-K254	6		
"				PE	-M120	PE	PE					/3.D5	PE			
							strip terminal : -XS10									
							totality : 4									
preheater control	1				-XK	1	1					/24.C3	L01-H1			
"	2				-XK	2	2					/24.C3	K77/A1			
"	3				-XK	3	3					/24.C4	-N276	1		
"	4				-XK	4	4					/24.C4	-N276	3		

alteration	date	name norm		
		proc.	E.H.	13.04.2018
		rev..		

substitute through

substitute for

origin

GekaKonus®

wiring diagram SES-18-3876
NUK-HP
3500
95bar
-XS7,-XS8,-XS9,-XS10

10-9842

shett 44
53 Bl.